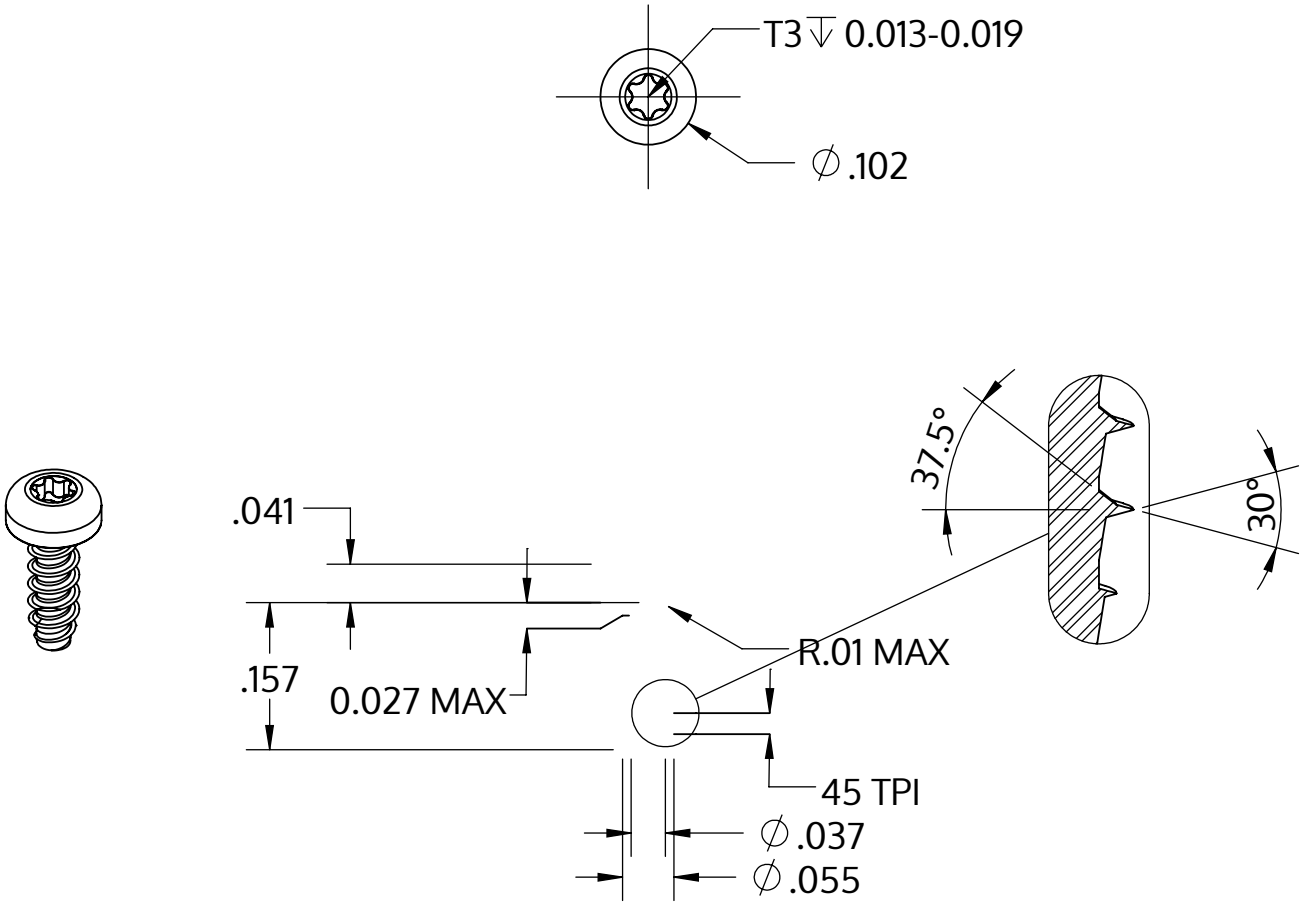


| | |
|---|---|
| Metric size | M1.4 x 0.57 mm |
| US size (converted) | #0-45 |
| | Tolerances [inch] |
| Length | +/- 0.014 |
| Head diameter | +0 / -0.009 |
| Head height | +/- 0.004 |
| Thread diameter | +0.003 / -0 |

| | |
|---|---|
| Beschrijving | STP39 1.4x4.0 - T3 |
| Materiaal | roestvrij staal A2 |
| Oppervlak | blank, geetst en gepassieveerd |
| Gewicht | 0.061 kg / 1000 stuk |

| | | |
|---|---|---|
| SCREWERK | **STP390140040E** | |
| _Zoll Zeichnung Größe A | Schaal 5:1 | 2024-10 |