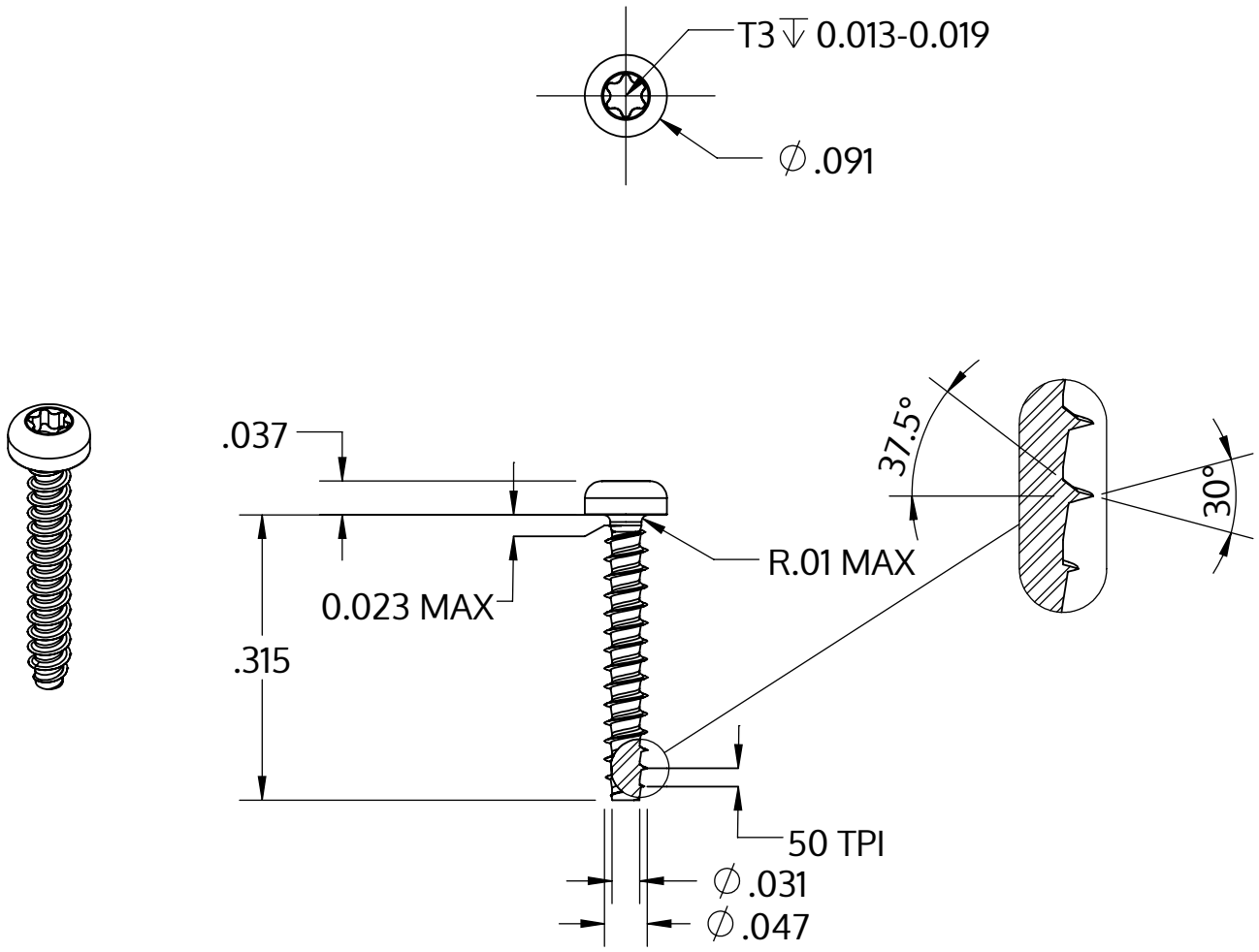

Metric size	M1.2 x 0.51 mm
US size (converted)	#0-50
	Tolerances [inch]
Length	+/- 0.017
Head diameter	+0 / -0.009
Head height	+/- 0.004
Thread diameter	+0.003 / -0

Description	STP39 1.2x8.0 - T3
Material	stainless-steel A2
Surface	bright, pickled and passivated
Weight	0.065 kg / 1000 pieces

SCREWERK	**STP390120080E**	
Inch Drawing Size A	Scale 5:1	2024-10