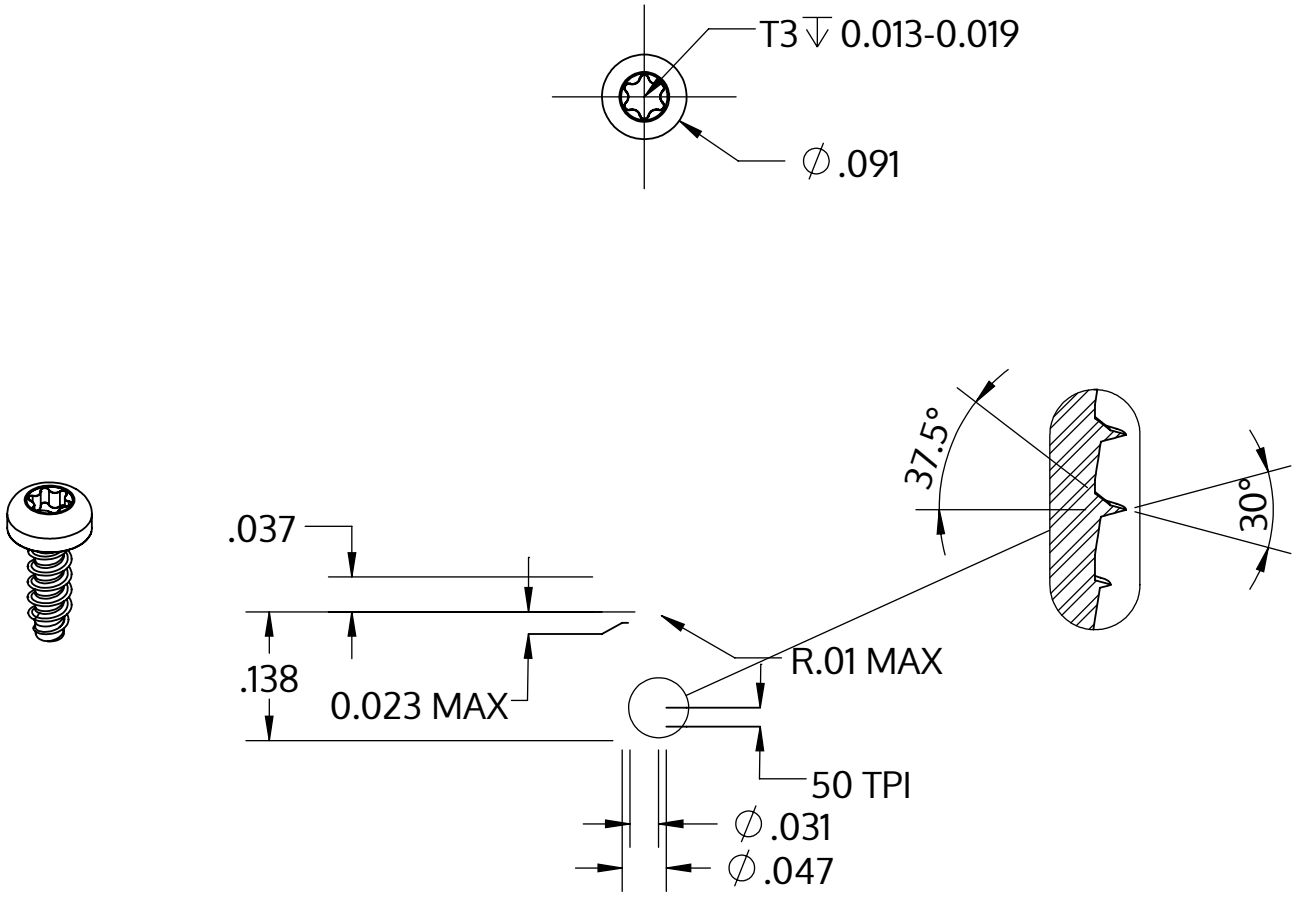

Metric size	M1.2 x 0.51 mm
US size (converted)	#0-50
	Tolerances [inch]
Length	+/- 0.014
Head diameter	+0 / -0.009
Head height	+/- 0.004
Thread diameter	+0.003 / -0

Description	STP39 1.2x3.5 - T3
Material	steel, hardened
Surface	zinc-plated 5-7 µm, baked, blue / transparent passivated
Weight	0.040 kg / 1000 pieces

SCREWERK	**STP390120035S**	
Inch Drawing Size A	Scale 5:1	2024-10