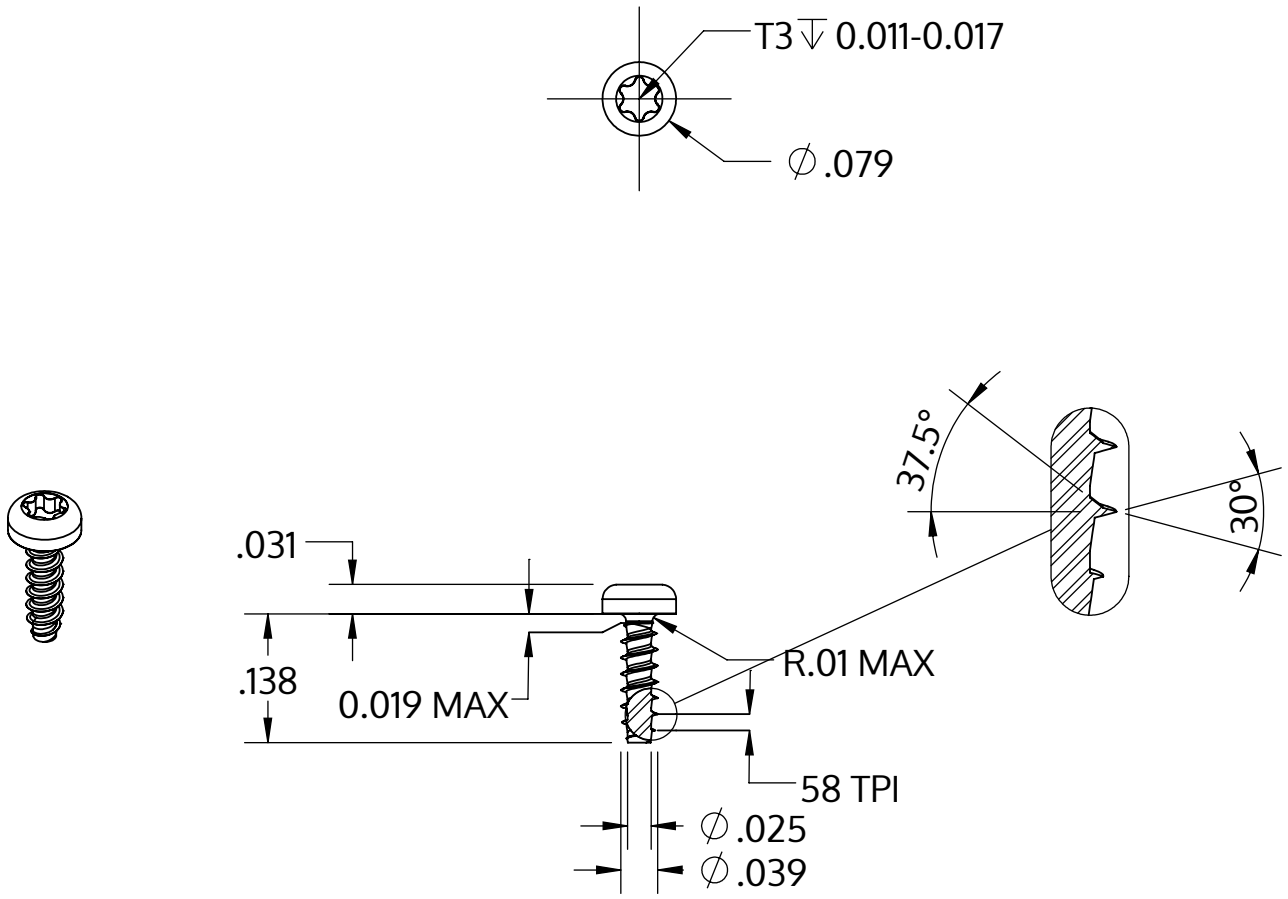

Metric size	M1 x 0.44 mm
US size (converted)	#0.039-58
	Tolerances [inch]
Length	+/- 0.014
Head diameter	+0 / -0.009
Head height	+/- 0.004
Thread diameter	+0.003 / -0

Description	STP39 1.0x3.5 - T3
Material	stainless-steel A2
Surface	bright, pickled and passivated
Weight	0.026 kg / 1000 pieces

SCREWERK

STP390100035E

Inch Drawing Size A	Scale None:1	2024-04