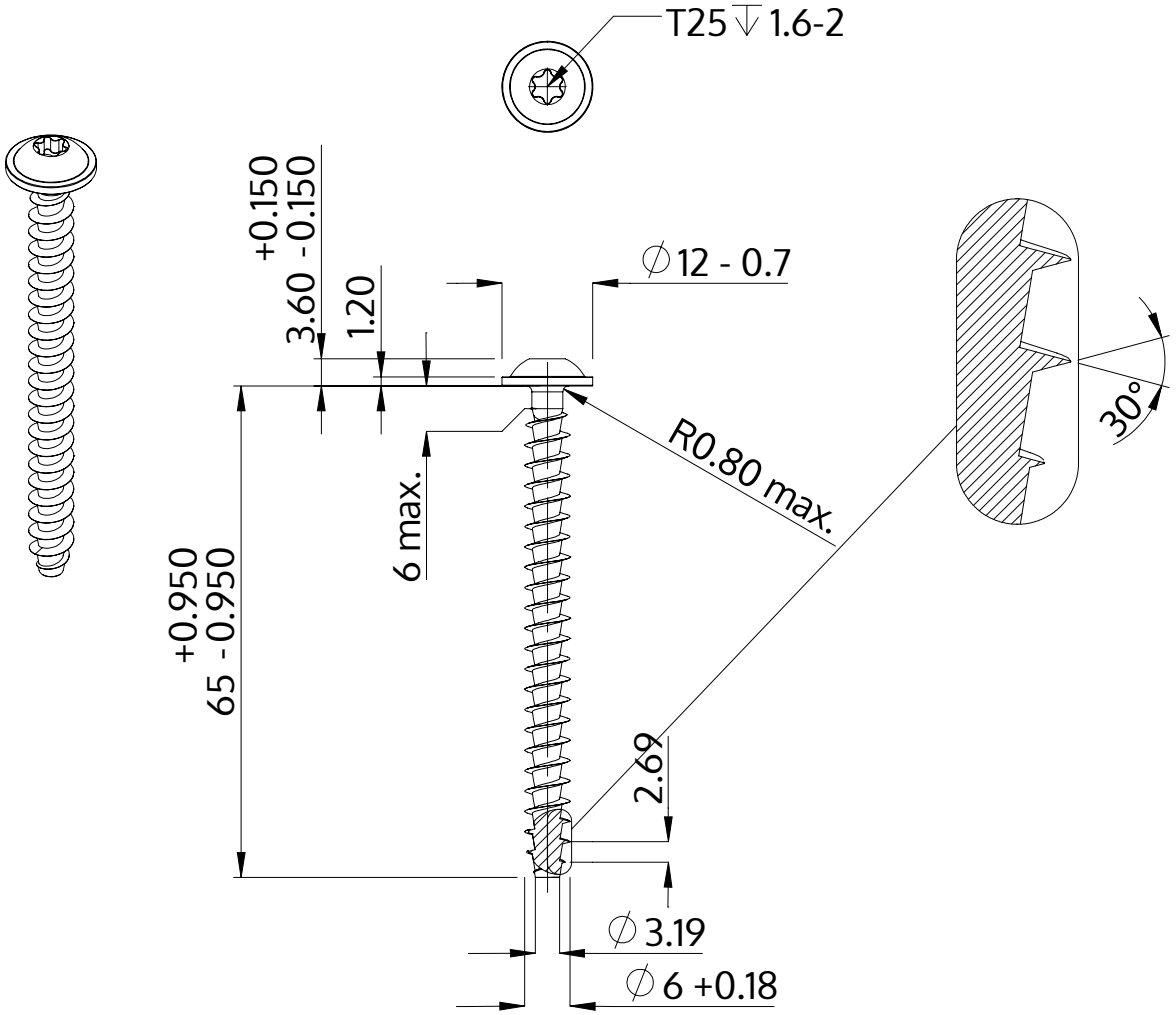

Description	STP38A 6.0x65.0 - T25
Material	stainless-steel A2
Surface	bright, pickled and passivated
Weight	8.236 kg / 1000 pieces

SCREWERK	**STP38A0600650E**	
Metric Drawing A4	Scale 1:1	2024-10