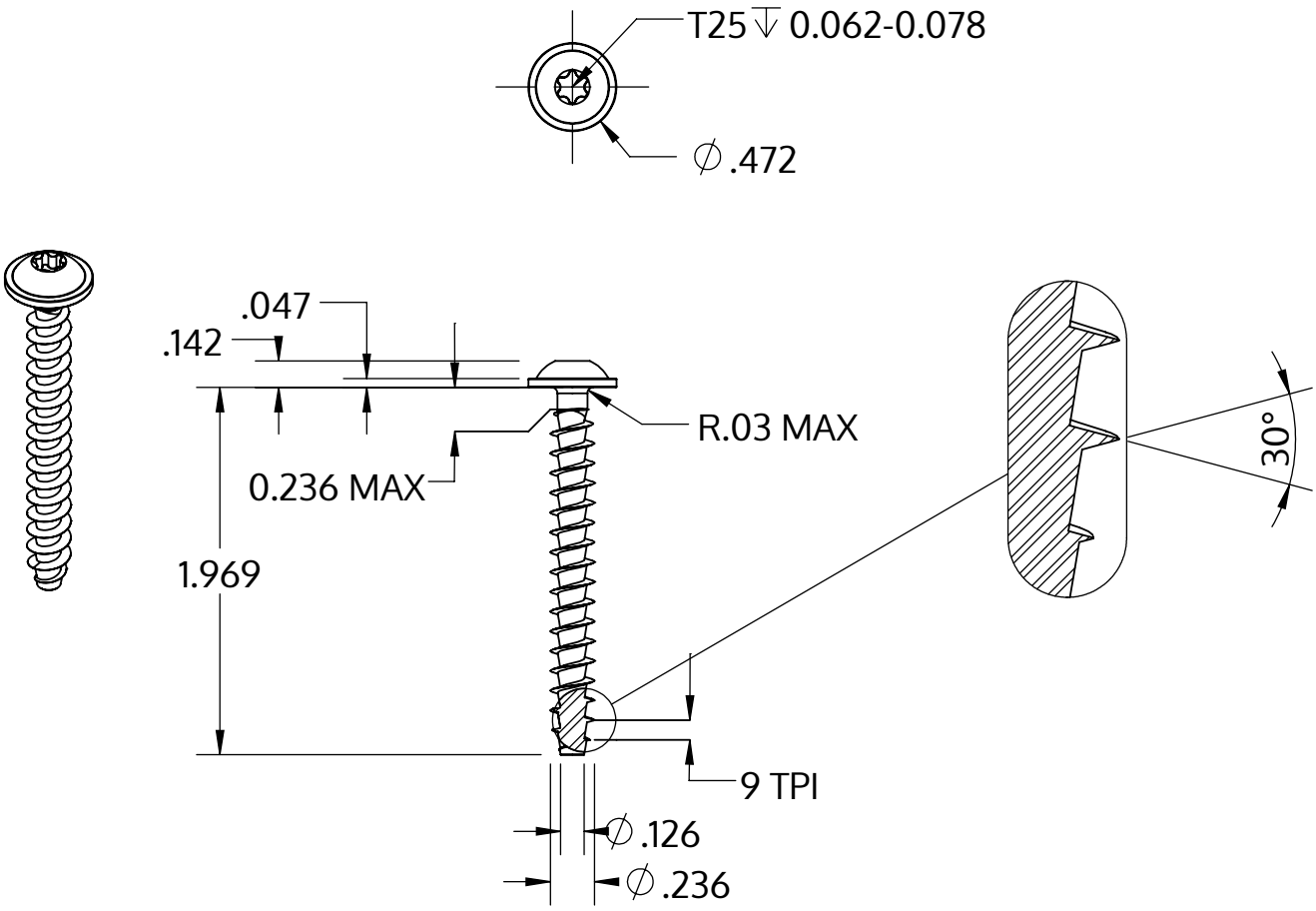

Metric size	M6 x 2.69 mm
US size (converted)	#0.236-9
	Tolerances [inch]
Length	+/- 0.031
Head diameter	+0 / -0.027
Head height	+/- 0.005
Thread diameter	+0.007 / -0

Descriere	STP38A 6.0x50.0 - T25
Material	oțel, călit
Exterior	zincat 5-7 µm, recopt, pasivat transparent/albastru
Greutate	6.704 kg / 1000 unități

SCREWERK	**STP38A0600500S**	
_Zoll Zeichnung Größe A	Scalarea 1:1	2024-10