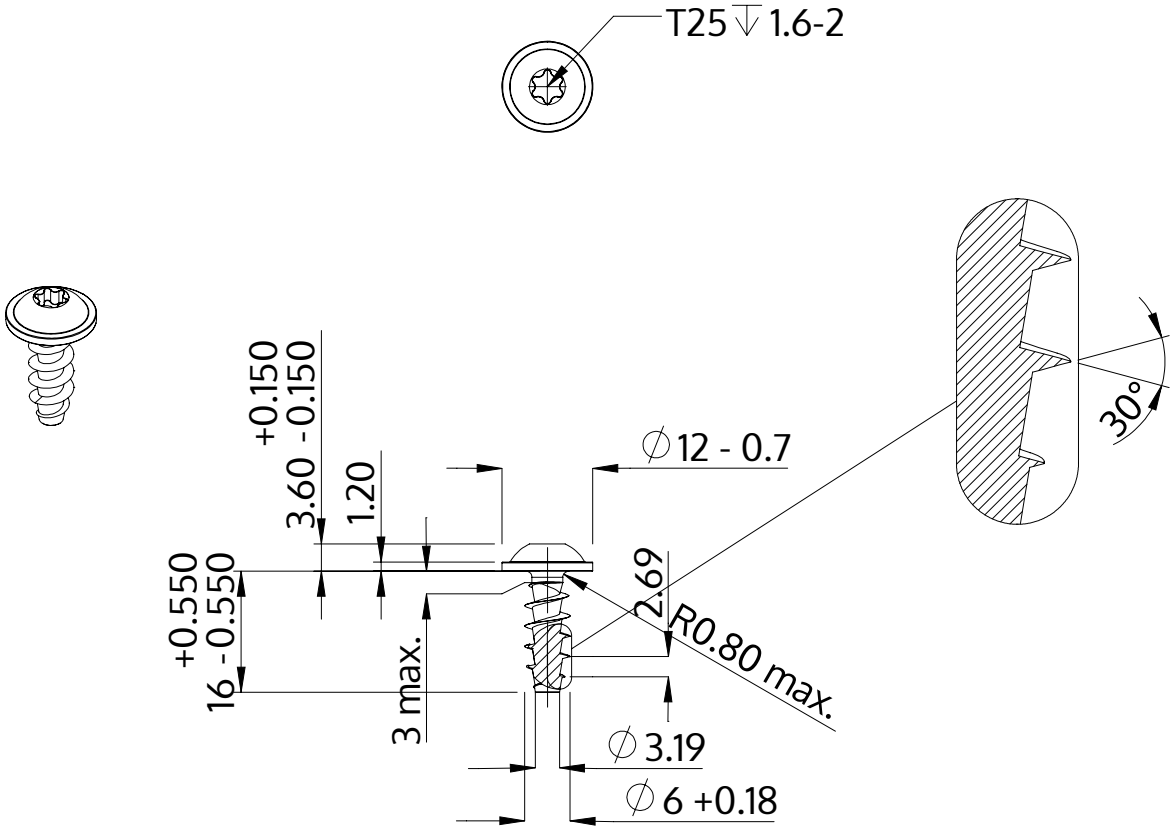

Description	STP38A 6.0x16.0 - T25
Material	stainless-steel A2
Surface	bright, pickled and passivated
Weight	3.232 kg / 1000 pieces

SCREWERK	**STP38A0600160E**	
Metric Drawing A4	Scale None:1	2024-04