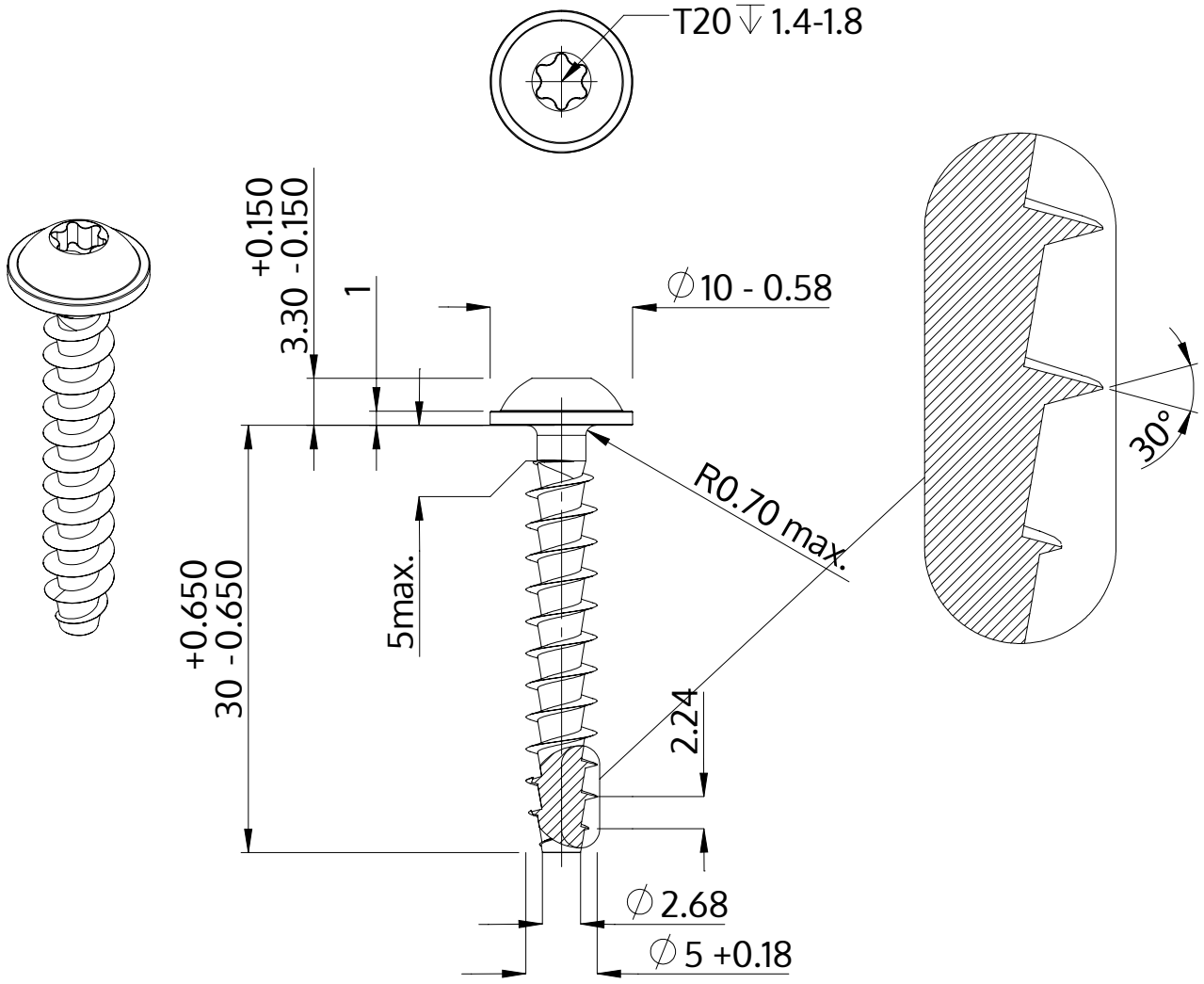

Description	STP38A 5.0x30.0 - T20
Material	steel, hardened
Surface	zinc-plated 5-7 µm, baked, blue / transparent passivated
Weight	3.203 kg / 1000 pieces

SCREWERK	**STP38A0500300S**	
Metric Drawing A4	Scale None:1	2024-04