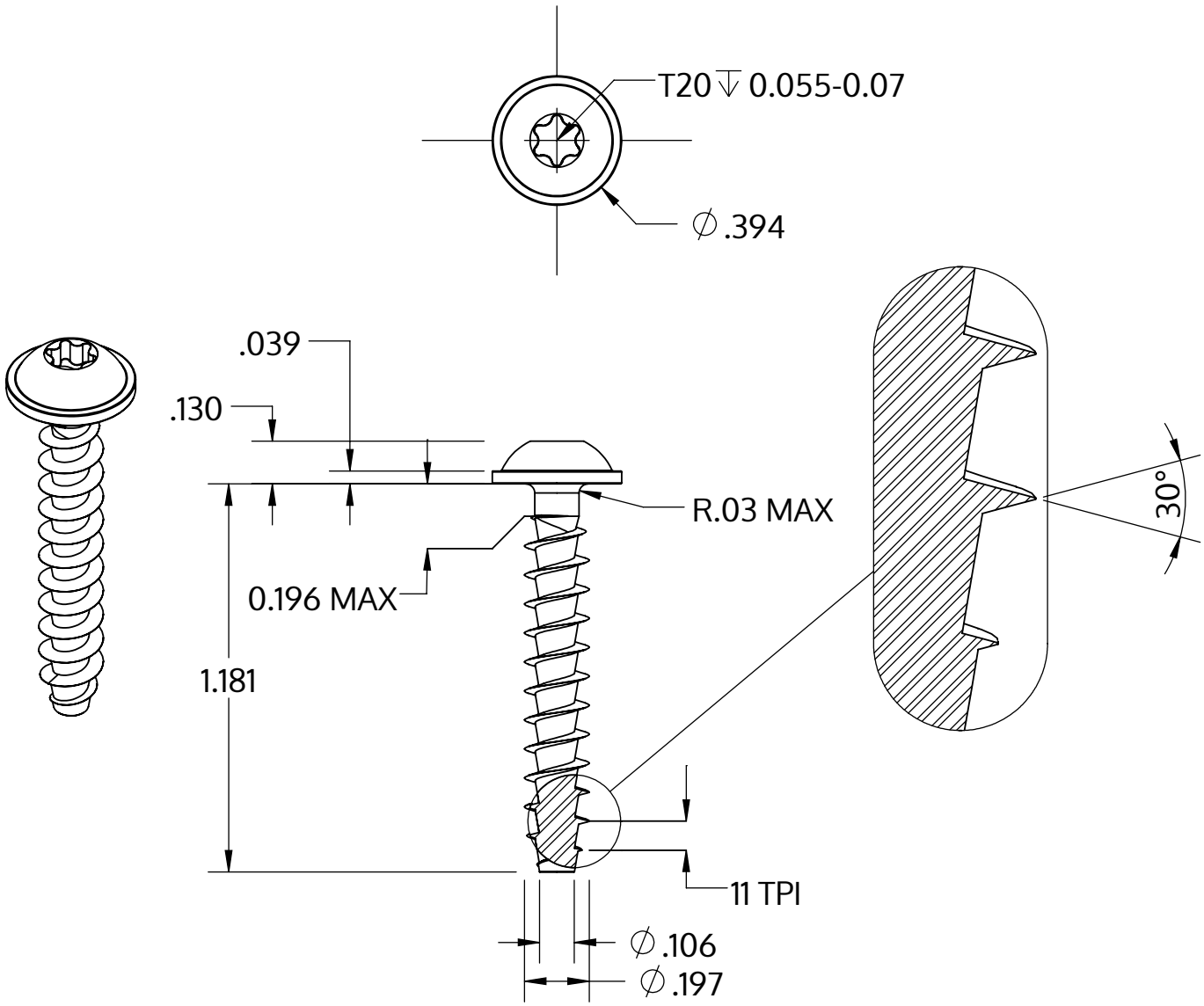


| | |
|---|---|
| Metric size | M5 x 2.24 mm |
| US size (converted) | #11-11 |
| | Tolerances [inch] |
| Length | +/- 0.025 |
| Head diameter | +0 / -0.022 |
| Head height | +/- 0.005 |
| Thread diameter | +0.007 / -0 |

| | |
|---|---|
| Description | STP38A 5.0x30.0 - T20 |
| Material | steel, hardened |
| Surface | Zinc-Nickel-plated min. 5µm, passivated black/ Cr-VI-free, baked, sealed |
| Weight | 3.203 kg / 1000 pieces |

| | | |
|---|---|---|
| SCREWERK | **STP38A0500300B** | |
| Inch Drawing Size A | Scale 2:1 | 2024-10 |