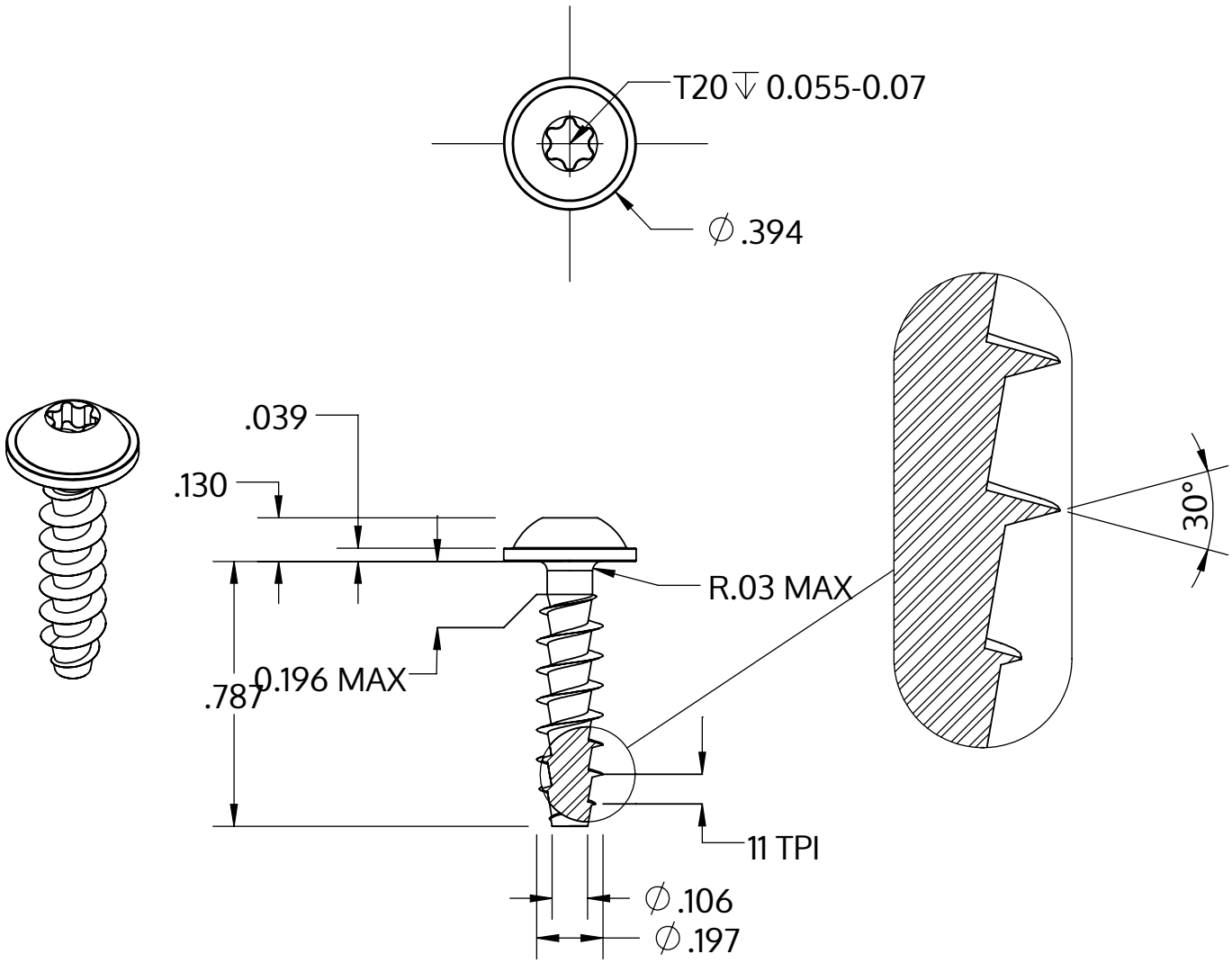


| | |
|---|---|
| Metric size | M5 x 2.24 mm |
| US size (converted) | #11-11 |
| | Tolerances [inch] |
| Length | +/- 0.025 |
| Head diameter | +0 / -0.022 |
| Head height | +/- 0.005 |
| Thread diameter | +0.007 / -0 |

| | |
|---|---|
| Description | STP38A 5.0x20.0 - T20 |
| Material | stainless steel A4 |
| Surface | bright, pickled and passivated |
| Weight | 2.462 kg / 1000 pieces |

| | | |
|---|---|---|
| SCREWERK | **STP38A0500200C** | |
| Inch Drawing Size A | Scale 2:1 | 2024-10 |