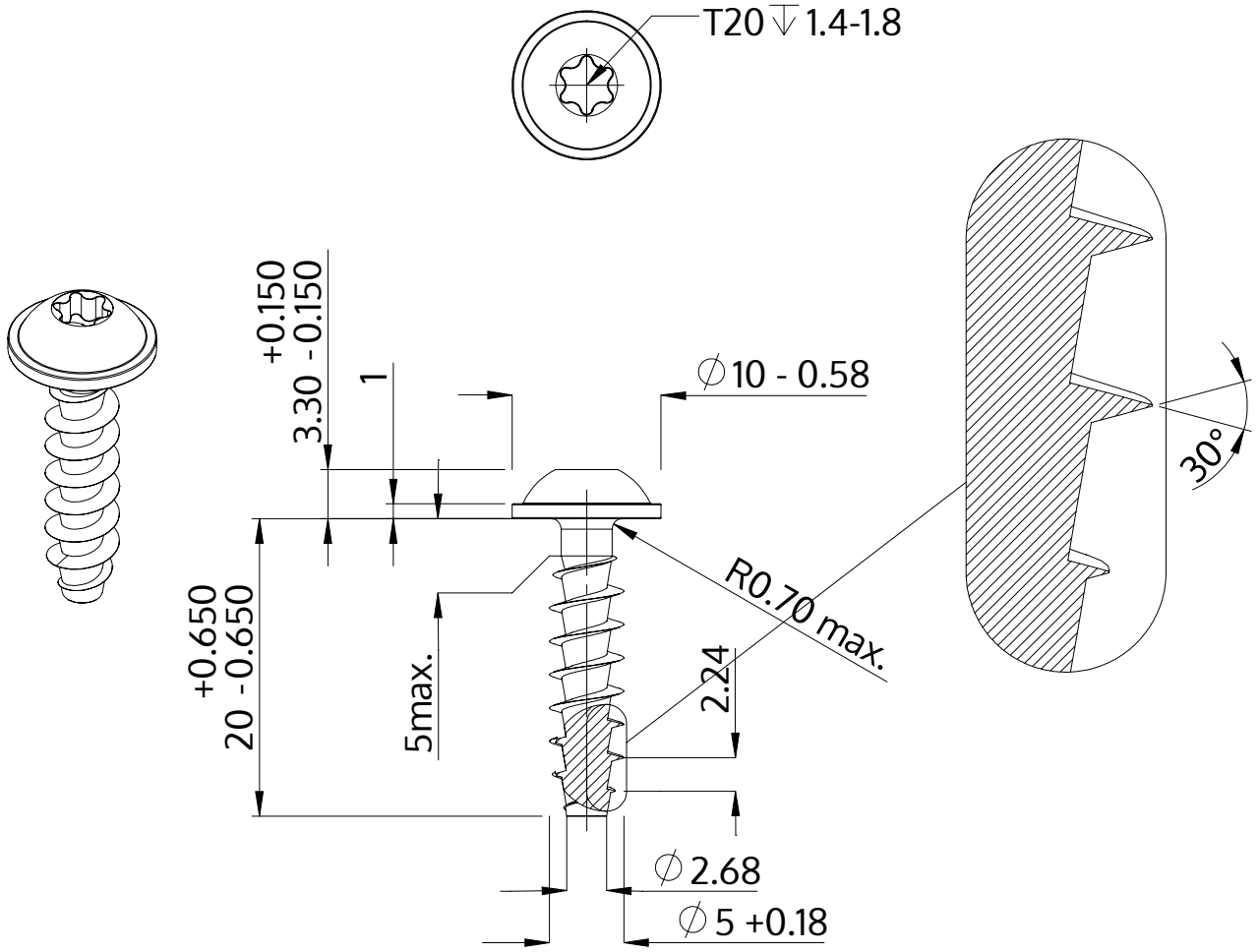

Description	STP38A 5.0x20.0 - T20
Material	stainless steel A4
Surface	bright, pickled and passivated
Weight	2.462 kg / 1000 pieces

SCREWERK	**STP38A0500200C**	
Metric Drawing A4	Scale 2:1	2024-10