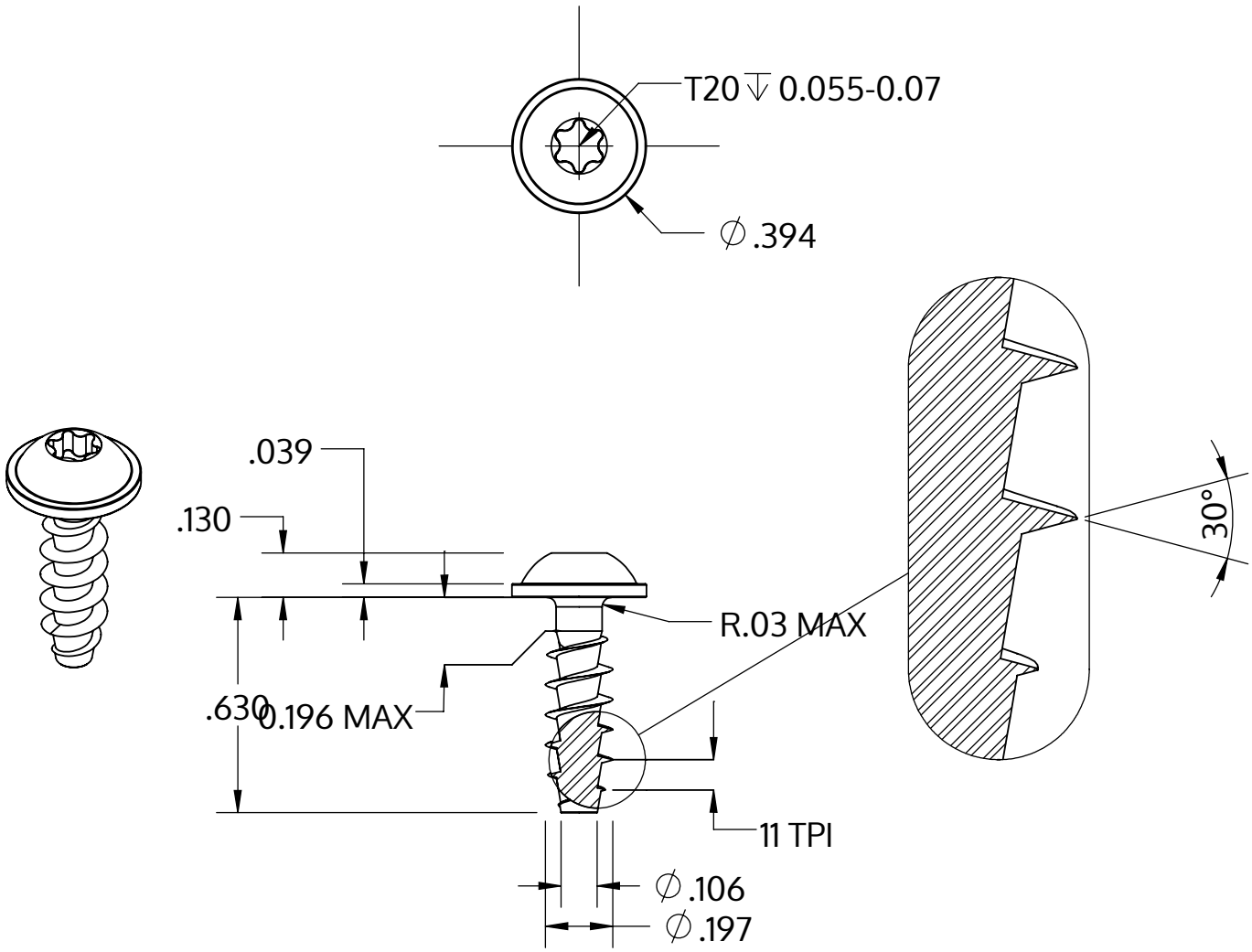


| | |
|---|---|
| Metric size | M5 x 2.24 mm |
| US size (converted) | #11-11 |
| | Tolerances [inch] |
| Length | +/- 0.021 |
| Head diameter | +0 / -0.022 |
| Head height | +/- 0.005 |
| Thread diameter | +0.007 / -0 |

| | |
|---|---|
| Description | STP38A 5.0x16.0 - T20 |
| Matière | acier inoxydable A2 |
| Surface | brillant décapé et passivé |
| Poids | 2.166 kg / 1000 Unité |

| | | |
|---|---|---|
| SCREWERK | **STP38A0500160E** | |
| _Zoll Zeichnung Größe A | Redimensionner 2:1 | 2024-10 |