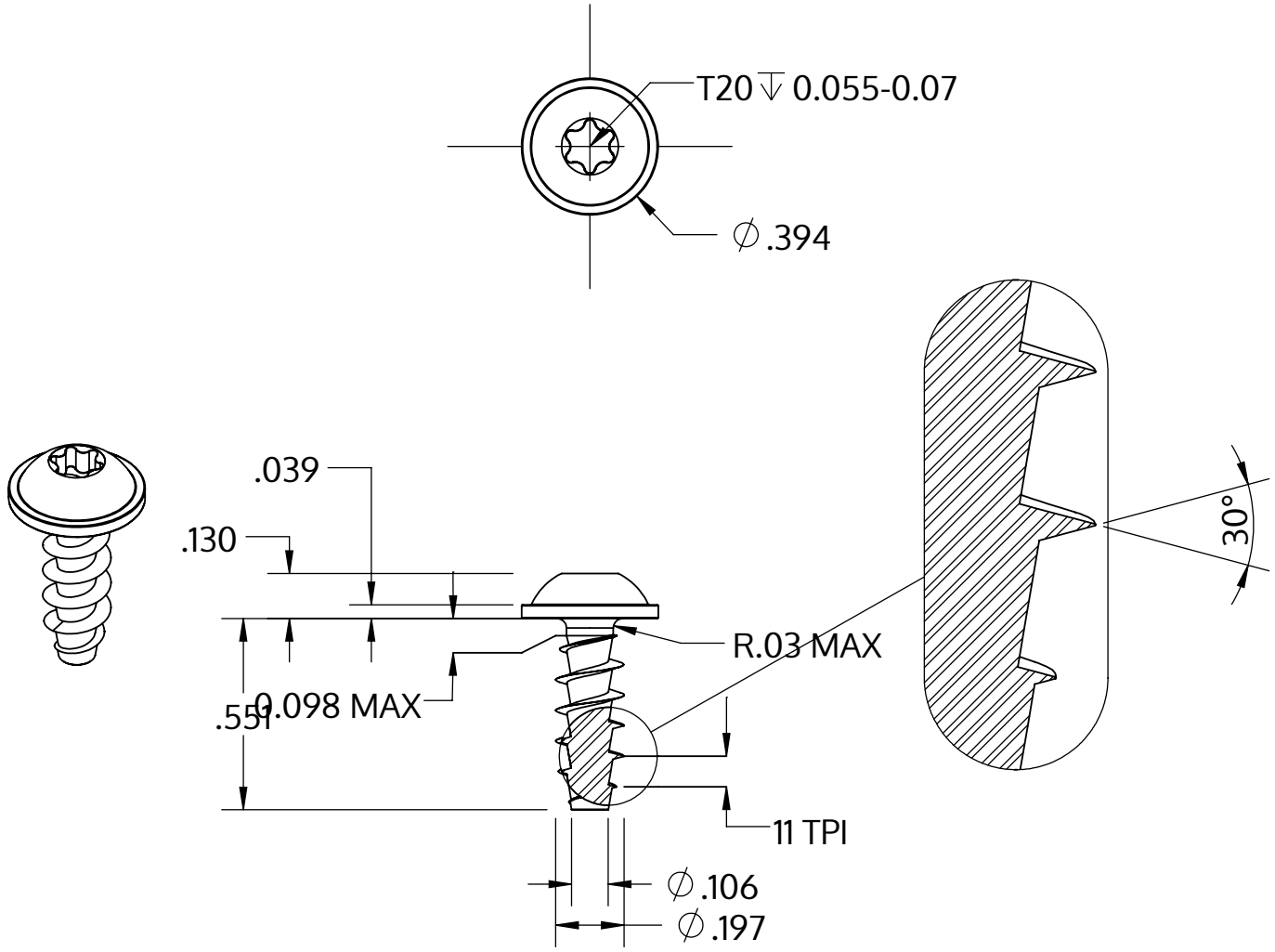

Metric size	M5 x 2.24 mm
US size (converted)	#11-11
	Tolerances [inch]
Length	+/- 0.021
Head diameter	+0 / -0.022
Head height	+/- 0.005
Thread diameter	+0.007 / -0

Description	STP38A 5.0x14.0 - T20
Material	stainless-steel A2
Surface	bright, pickled and passivated
Weight	2.018 kg / 1000 pieces

SCREWERK	**STP38A0500140E**	
Inch Drawing Size A	Scale None:1	2024-04