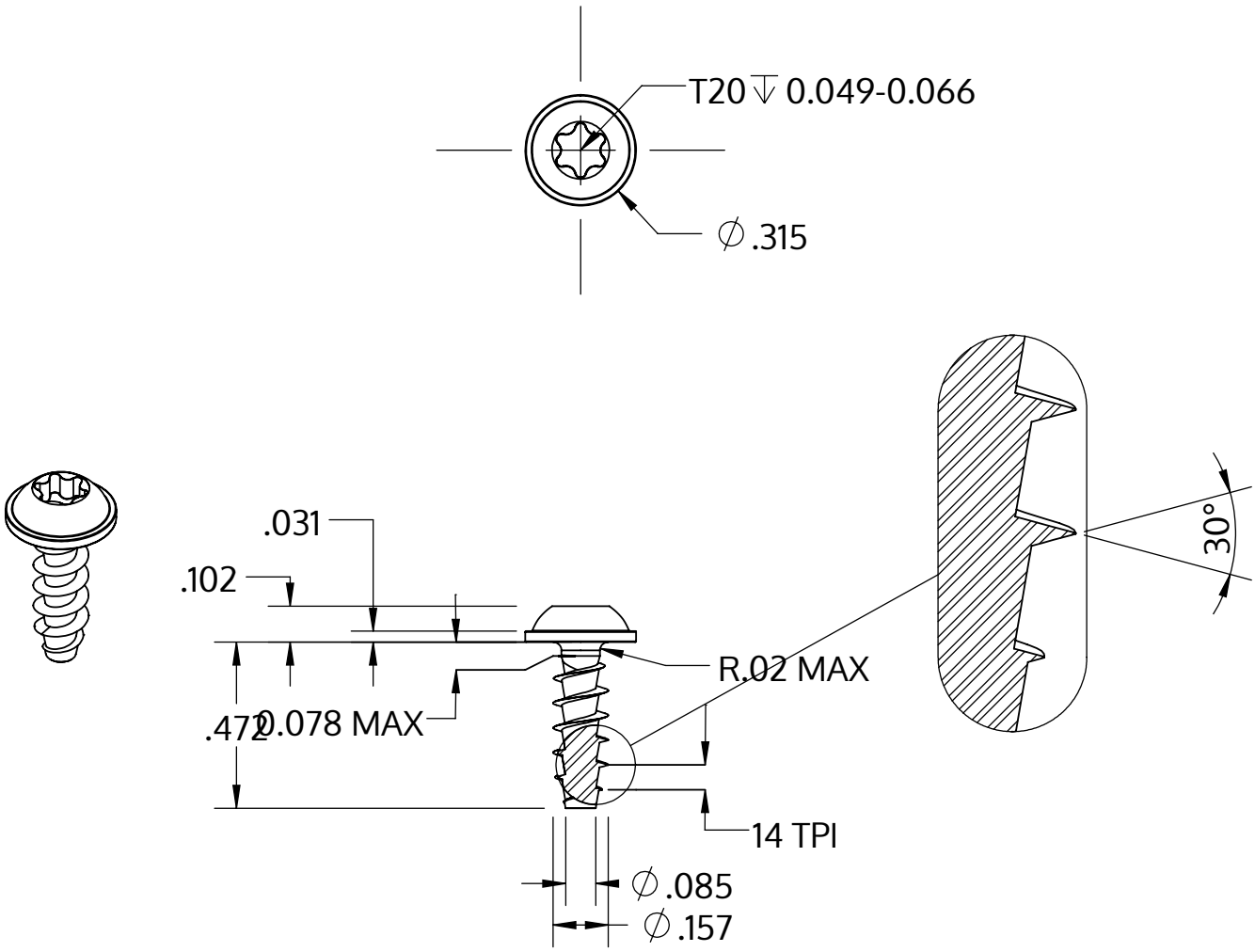

Metric size	M4 x 1.79 mm
US size (converted)	#8-14
	Tolerances [inch]
Length	+/- 0.021
Head diameter	+0 / -0.022
Head height	+/- 0.004
Thread diameter	+0.007 / -0

Description	STP38A 4.0x12.0 - T20
Material	stainless steel A4
Surface	bright, pickled and passivated
Weight	1.087 kg / 1000 pieces

SCREWERK	**STP38A0400120C**	
Inch Drawing Size A	Scale 2:1	2024-10