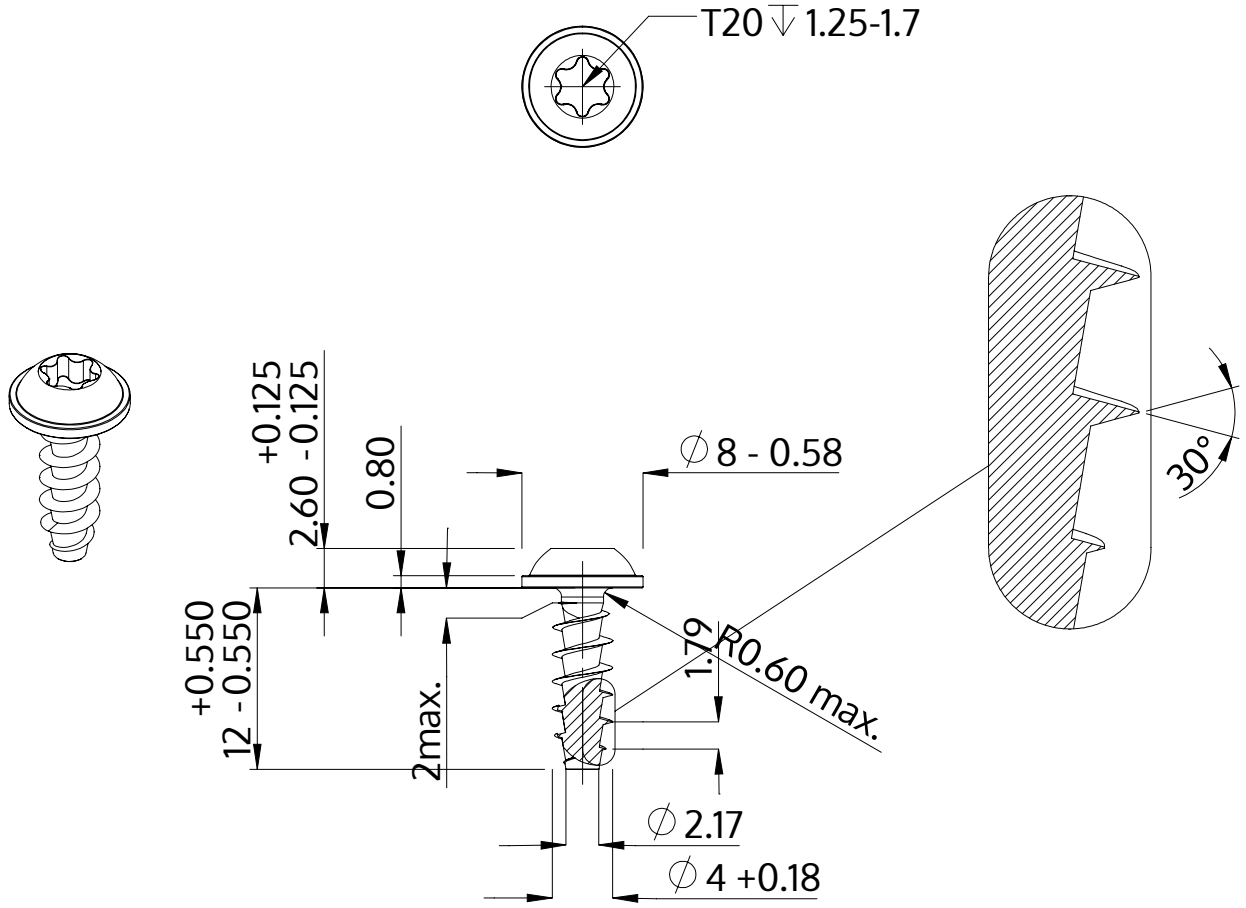

Description	STP38A 4.0x12.0 - T20
Material	stainless steel A4
Surface	bright, pickled and passivated
Weight	1.087 kg / 1000 pieces

SCREWERK	**STP38A0400120C**	
Metric Drawing A4	Scale 2:1	2024-10