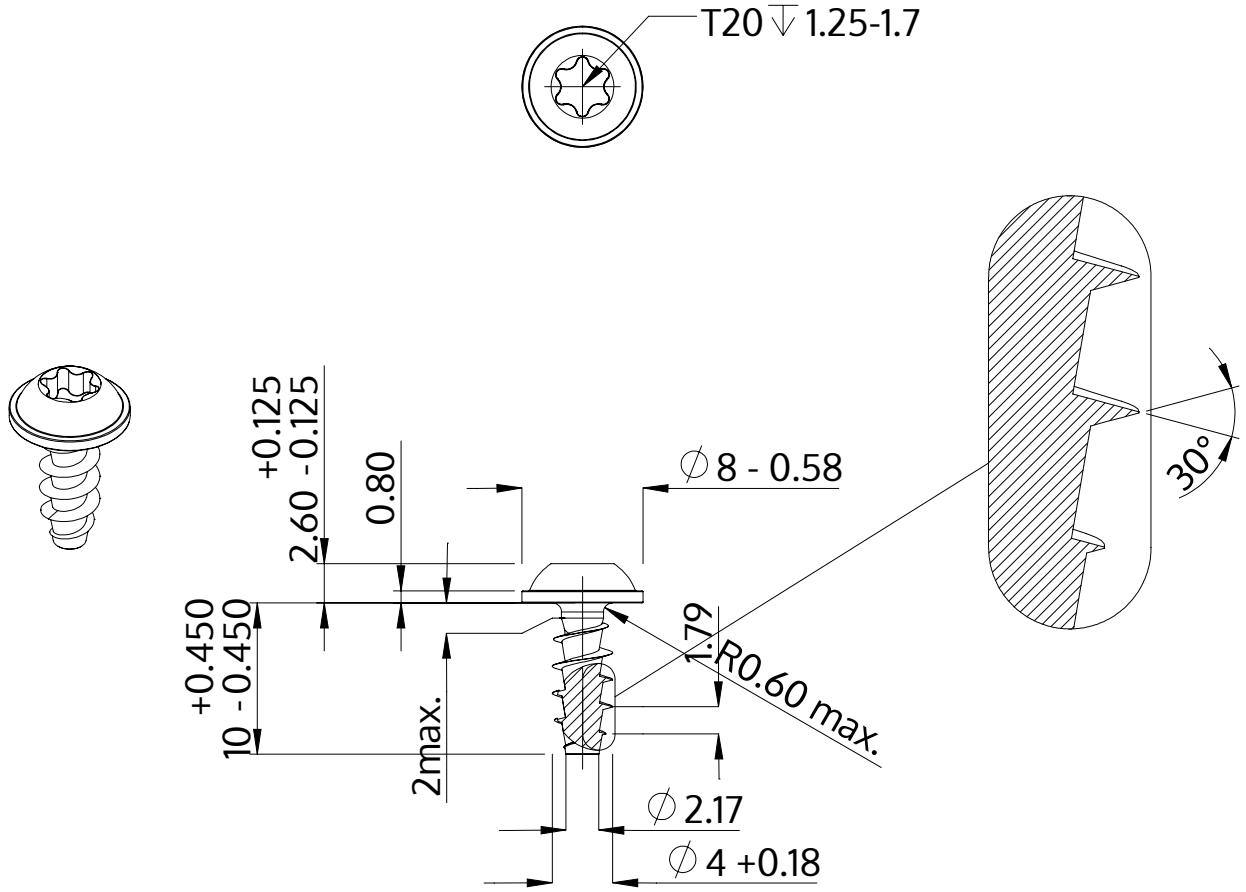

Description	STP38A 4.0x10.0 - T20
Material	steel, hardened
Surface	zinc-plated 5-7 µm, baked, blue / transparent passivated
Weight	0.991 kg / 1000 pieces

SCREWERK	**STP38A0400100S**	
Metric Drawing A4	Scale 2:1	2024-10