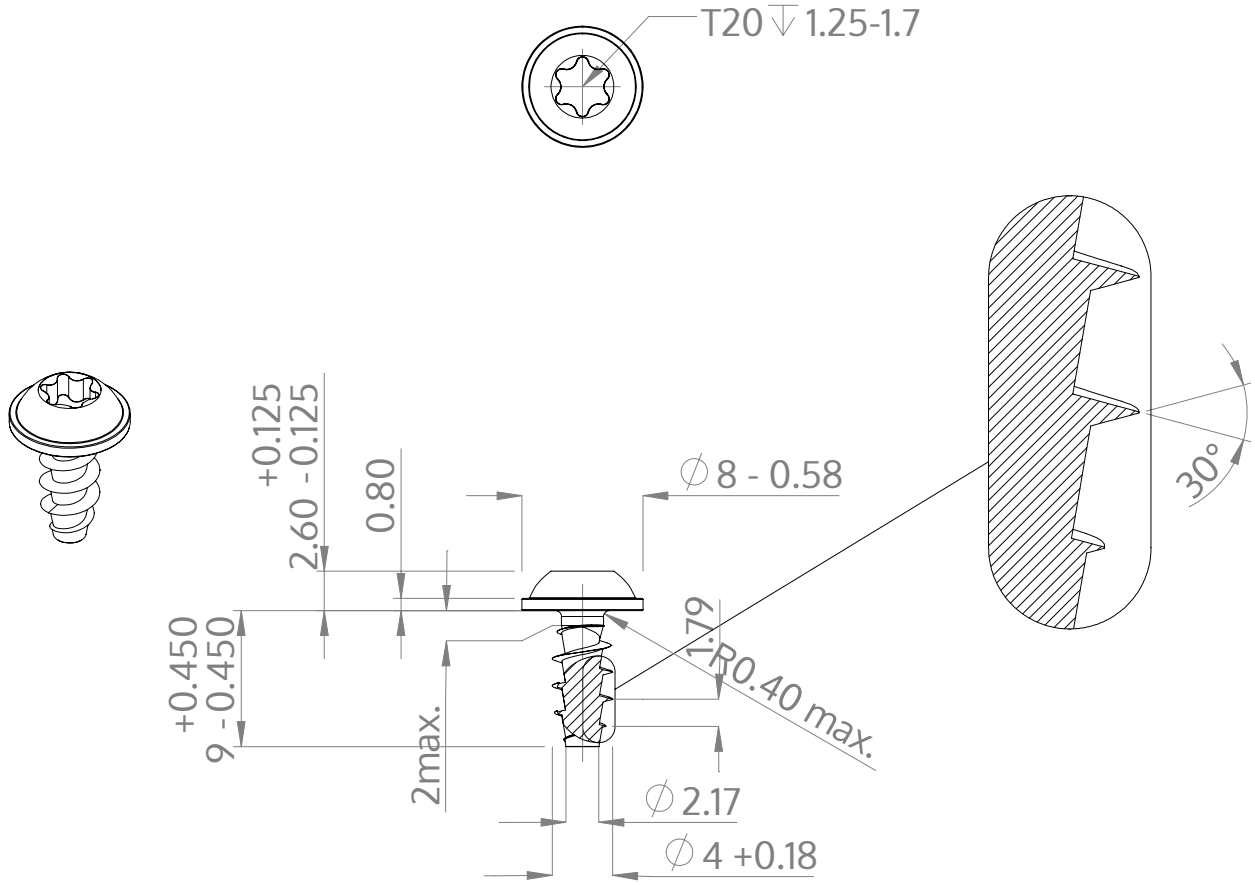

Description	STP38A 4.0x9.0 - T20
Material	stainless-steel A2
Surface	bright, pickled and passivated
Weight	0.942 kg / 1000 pieces

SCREWERK	**STP38A0400090E**	
Metric Drawing A4	Scale 2:1	2025-04