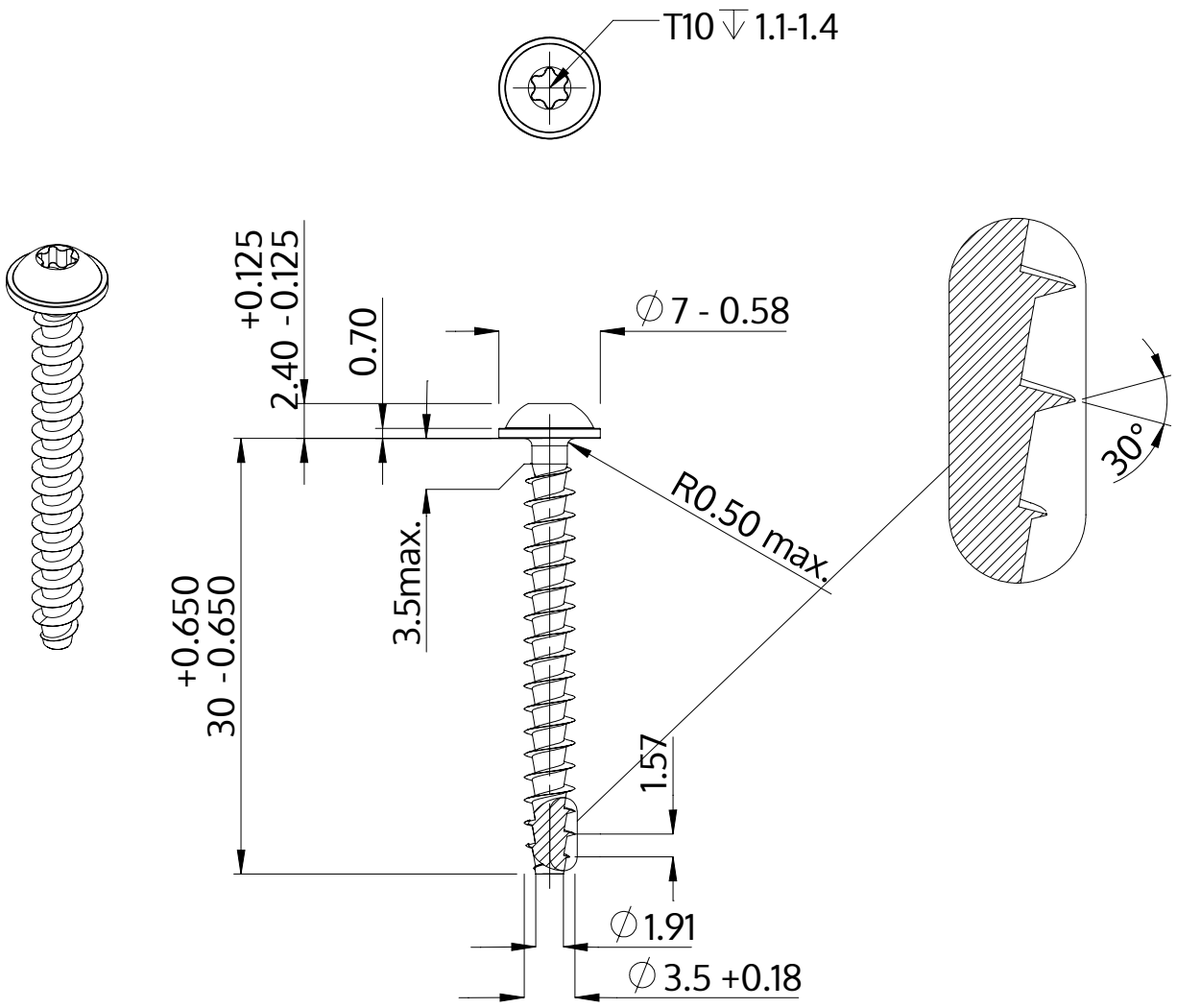

Description	STP38A 3.5x30.0 - T10
Material	stainless steel A4
Surface	bright, pickled and passivated
Weight	1.477 kg / 1000 pieces

SCREWERK	**STP38A0350300C**	
Metric Drawing A4	Scale 2:1	2024-05