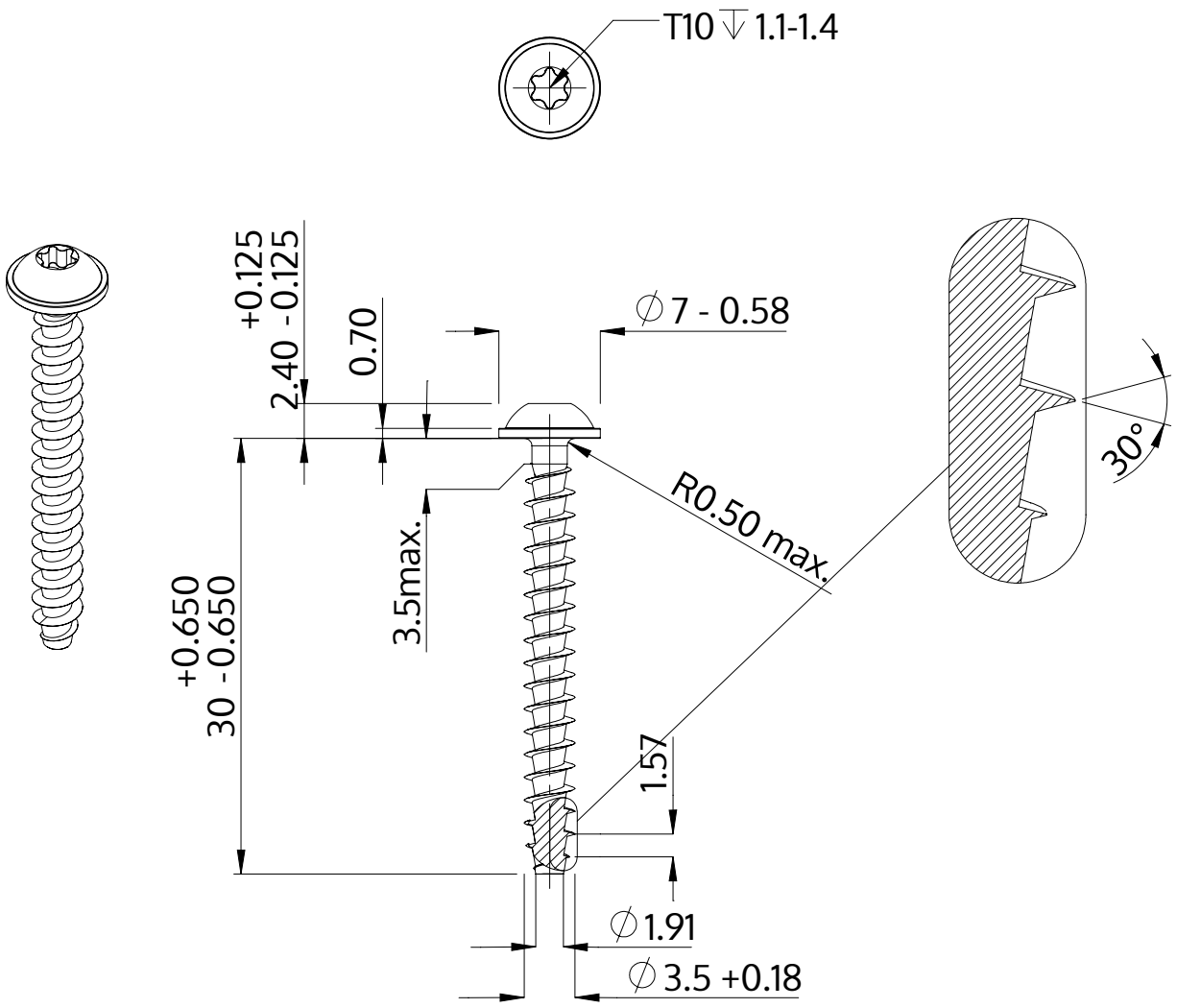

Description	STP38A 3.5x30.0 - T10
Material	steel, hardened
Surface	Zinc-Nickel-plated min. 5µm, passivated black/ Cr-VI-free, baked, sealed
Weight	1.477 kg / 1000 pieces

SCREWERK	**STP38A0350300B**	
Metric Drawing A4	Scale 2:1	2024-10