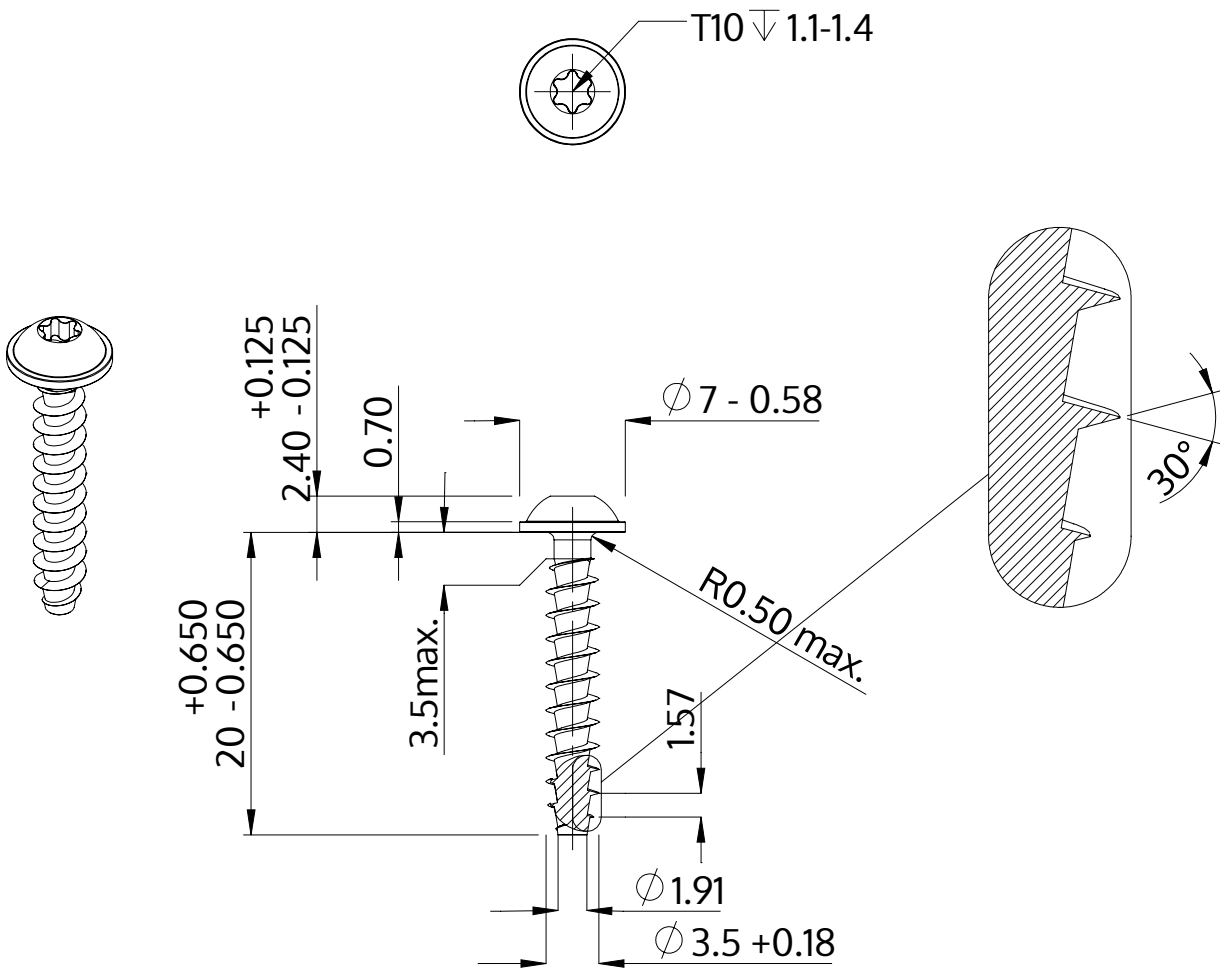

Description	STP38A 3.5x20.0 - T10
Material	steel, hardened
Surface	zinc-plated 5-7 µm, baked, blue / transparent passivated
Weight	1.105 kg / 1000 pieces

SCREWERK	**STP38A0350200S**	
Metric Drawing A4	Scale None:1	2024-04