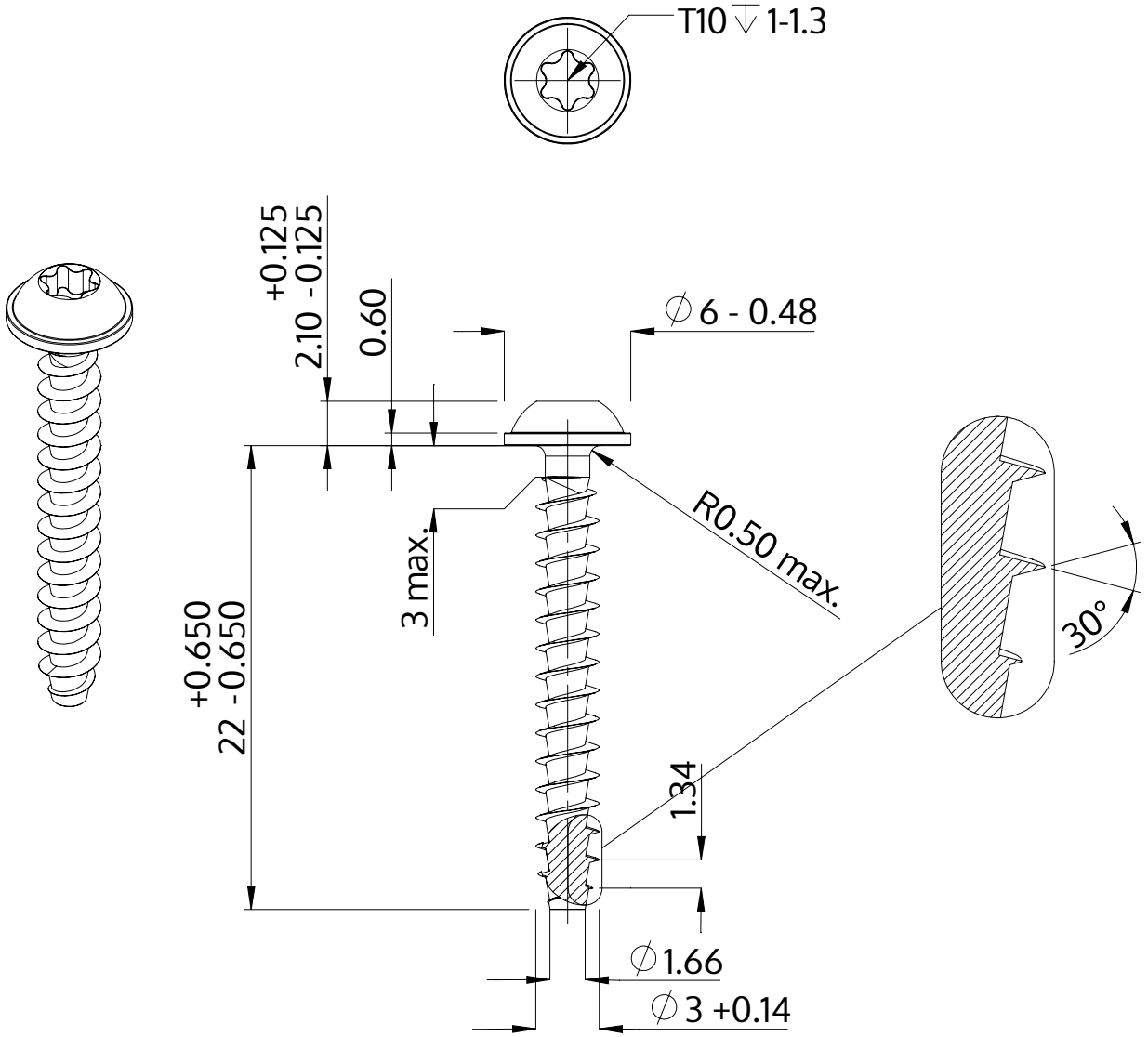

Description	STP38A 3.0x22.0 - T10
Material	stainless-steel A2
Surface	bright, pickled and passivated
Weight	0.867 kg / 1000 pieces

SCREWERK	**STP38A0300220E**	
Metric Drawing A4	Scale None:1	2024-05