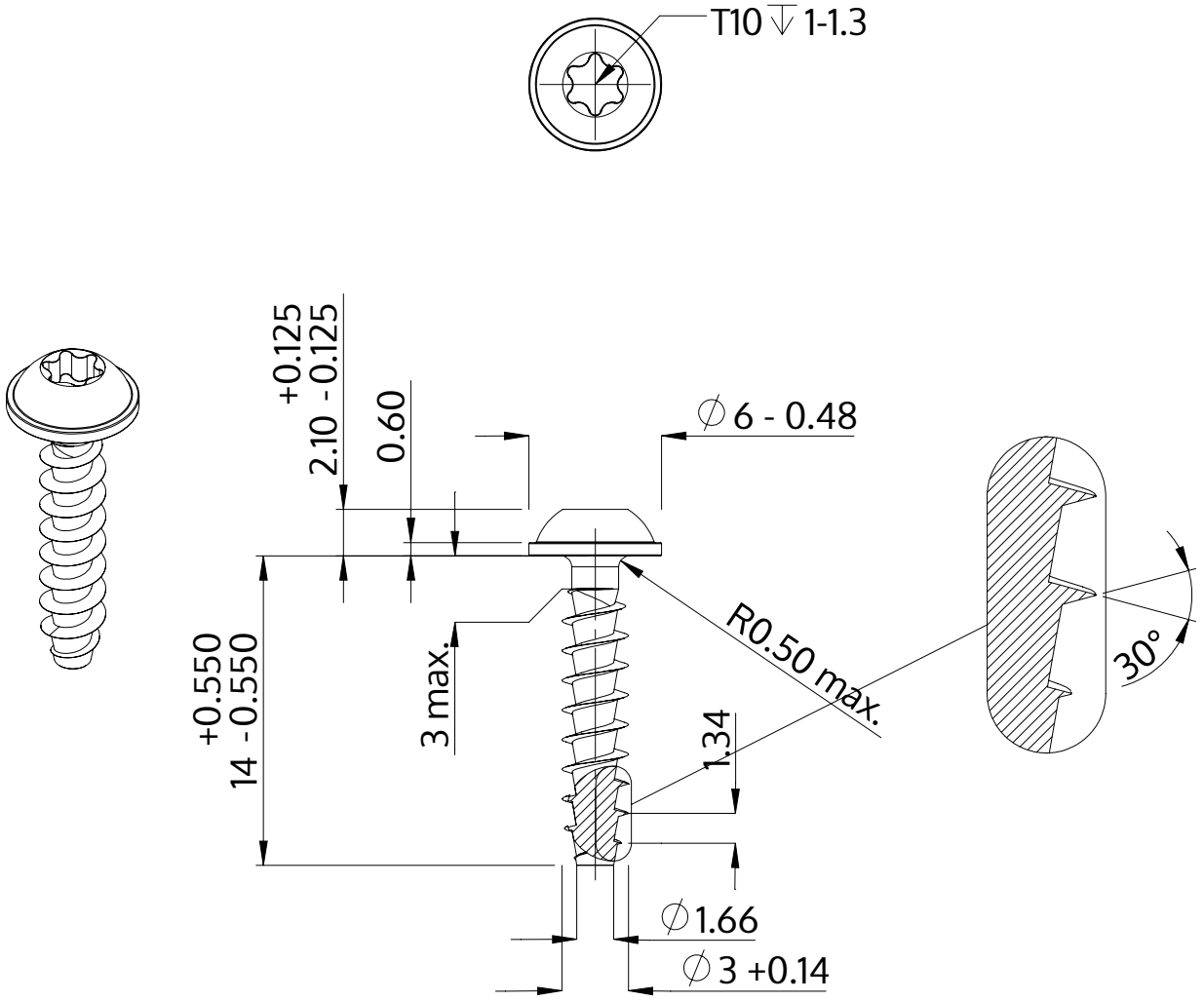

Description	STP38A 3.0x14.0 - T10
Material	steel, hardened
Surface	zinc-plated 5-7 µm, baked, blue / transparent passivated
Weight	0.638 kg / 1000 pieces

SCREWERK	**STP38A0300140S**	
Metric Drawing A4	Scale 3:1	2024-10