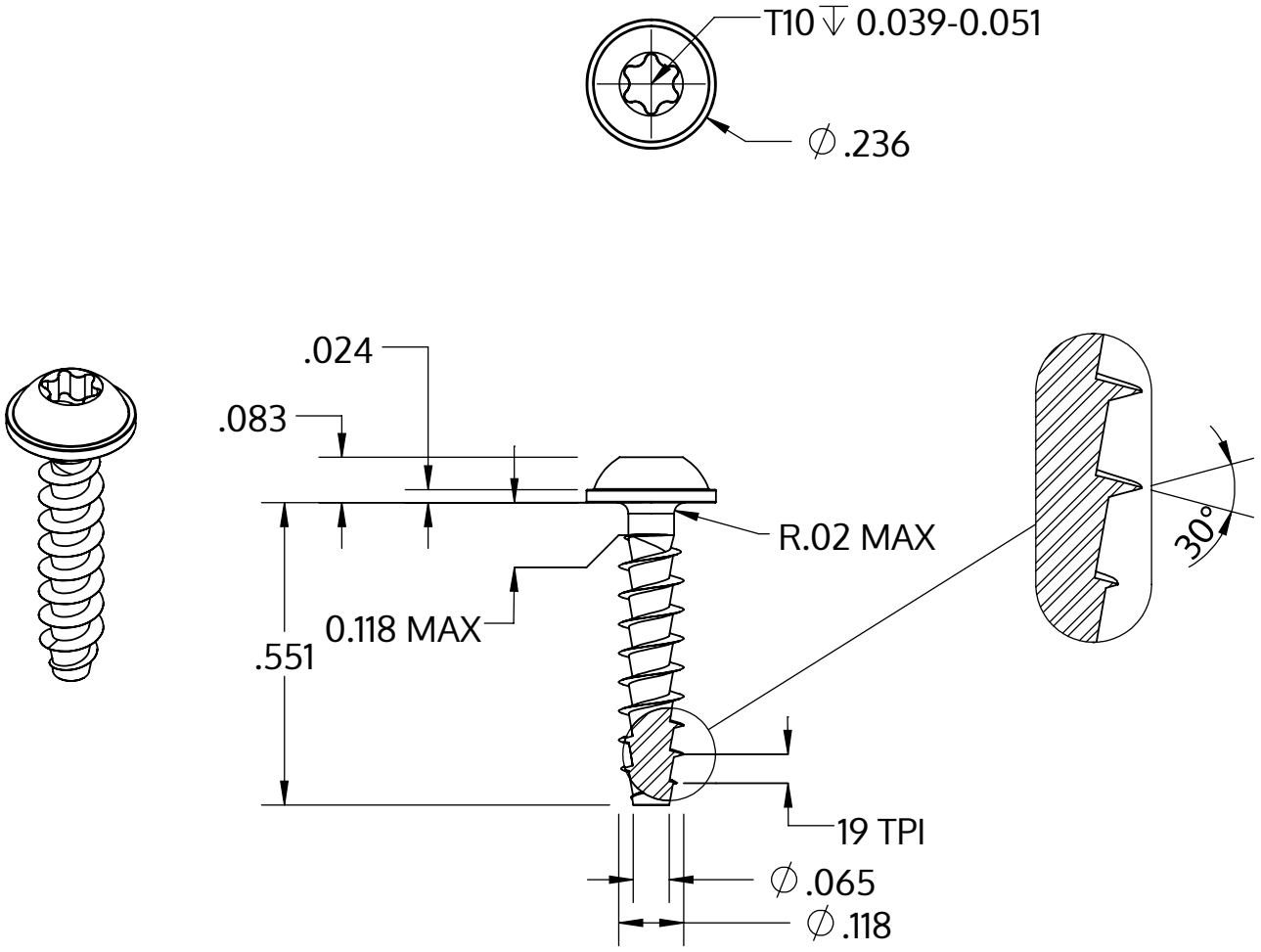

Metric size	M3 x 1.34 mm
US size (converted)	#4-19
	Tolerances [inch]
Length	+/- 0.021
Head diameter	+0 / -0.018
Head height	+/- 0.004
Thread diameter	+0.005 / -0

Descriere	STP38A 3.0x14.0 - T10
Material	oțel, călit
Exterior	zincat, Nichelat, pasivat negru / nu conține Cr-VI, recopt, ermetizat
Greutate	0.638 kg / 1000 unități

SCREWERK	**STP38A0300140B**	
_Zoll Zeichnung Größe A	Scalarea 3:1	2024-10