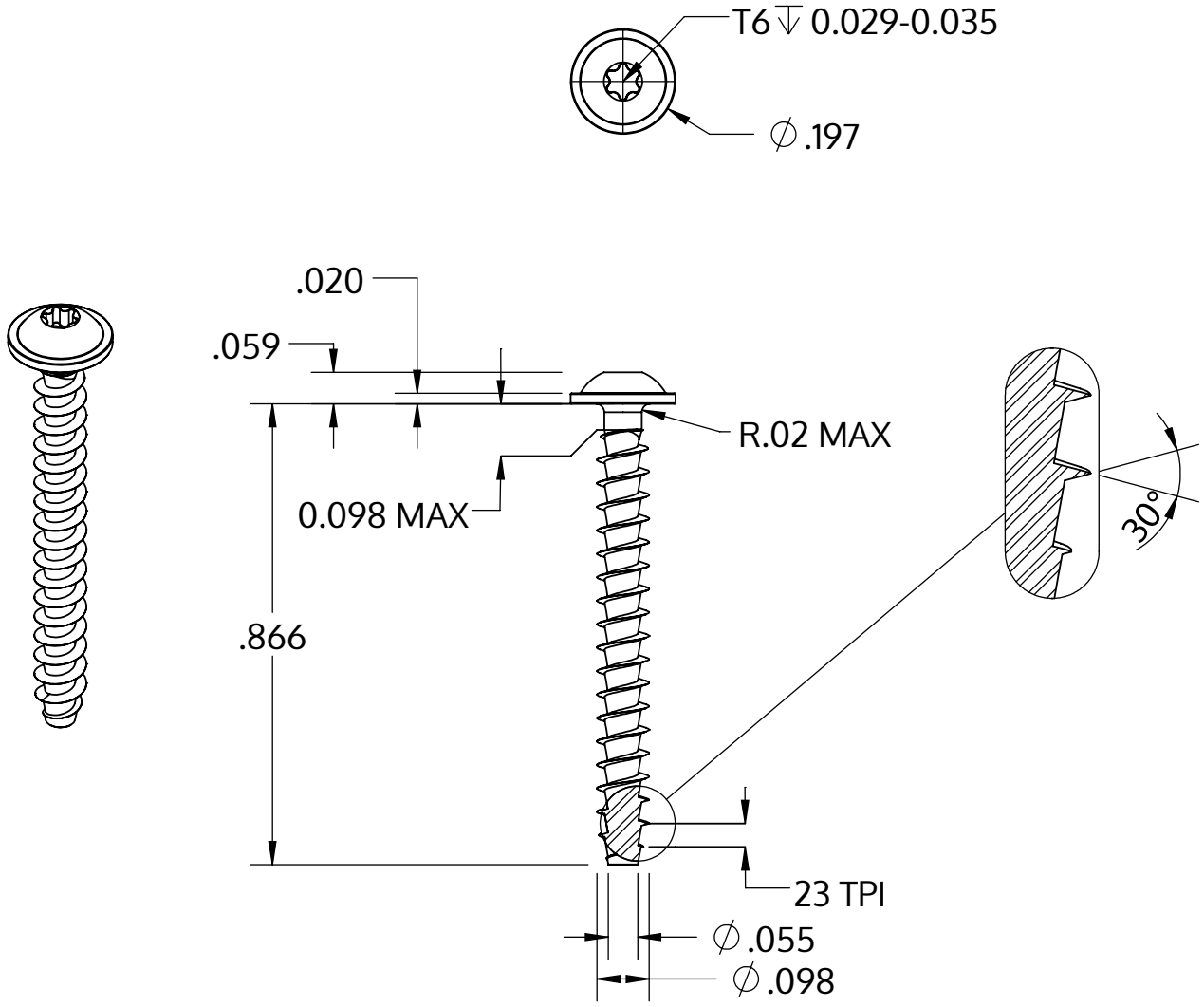

Metric size	M2.5 x 1.12 mm
US size (converted)	#3-23
	Tolerances [inch]
Length	+/- 0.025
Head diameter	+0 / -0.018
Head height	+/- 0.004
Thread diameter	+0.005 / -0

Descriere	STP38A 2.5x22.0 - T6
Material	oțel, călit
Exterior	zincat 5-7 µm, recopt, pasivat transparent/albastru
Greutate	0.558 kg / 1000 unități

SCREWERK	**STP38A0250220S**	
_Zoll Zeichnung Größe A	Scalarea 3:1	2024-10