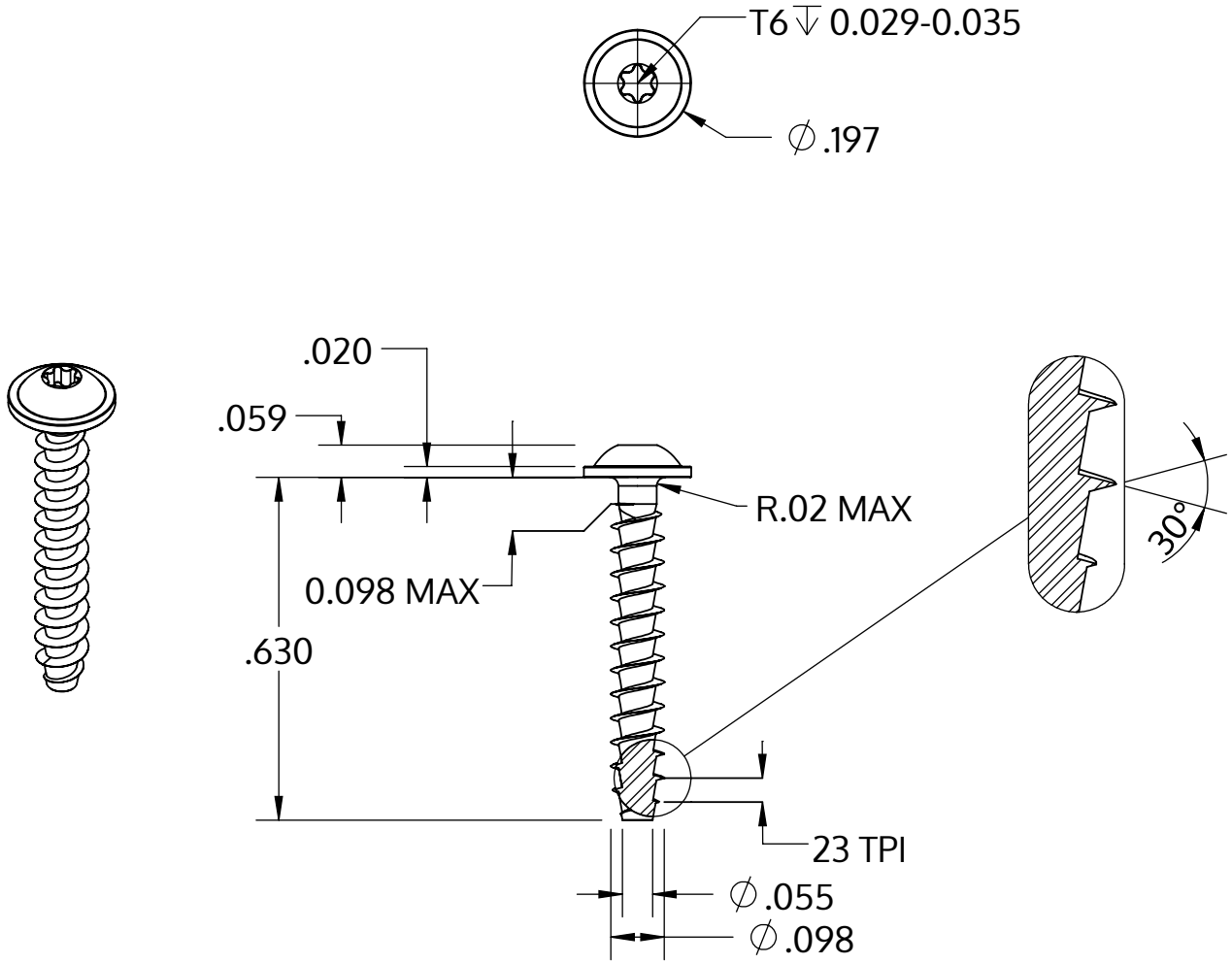


| | |
|---|---|
| Metric size | M2.5 x 1.12 mm |
| US size (converted) | #3-23 |
| | Tolerances [inch] |
| Length | +/- 0.021 |
| Head diameter | +0 / -0.018 |
| Head height | +/- 0.004 |
| Thread diameter | +0.005 / -0 |

| | |
|---|---|
| Beskrivelse | STP38A 2.5x16.0 - T6 |
| Materiale | Stål, forædlet |
| Overflade | ZnNi sort-passiveret, tempret, forseglet |
| Vægt | 0.435 kg / 1000 stykke |

| | | |
|---|---|---|
| SCREWERK | **STP38A0250160B** | |
| _Zoll Zeichnung Größe A | Skalering 3:1 | 2024-10 |