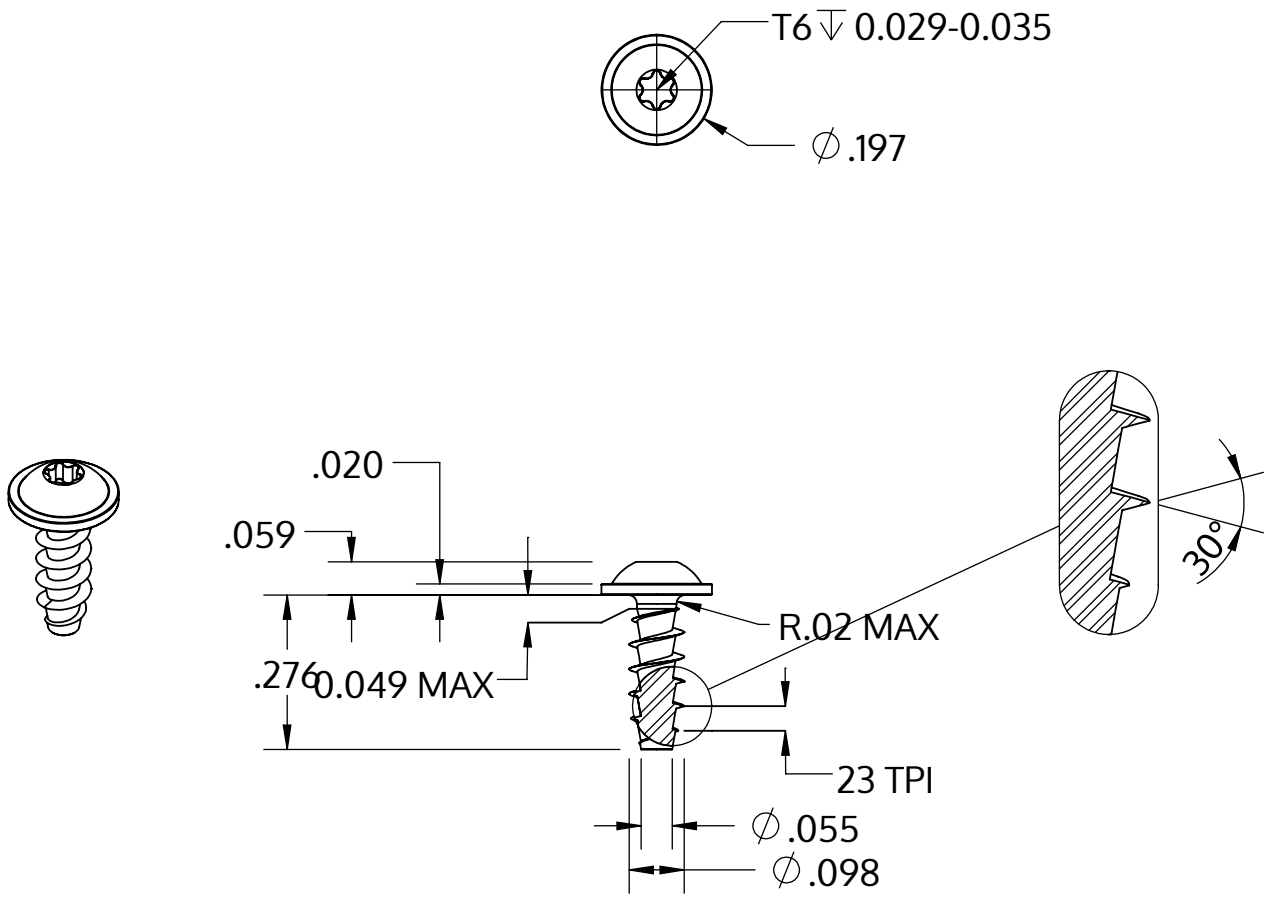


| | |
|---|---|
| Metric size | M2.5 x 1.12 mm |
| US size (converted) | #3-23 |
| | Tolerances [inch] |
| Length | +/- 0.017 |
| Head diameter | +0 / -0.018 |
| Head height | +/- 0.004 |
| Thread diameter | +0.005 / -0 |

| | |
|---|---|
| Opis | STP38A 2.5x7.0 - T6 |
| Materiał | Stal szlachetna A2 |
| Powierzchnia | Prosta, bejcowana i pasywowana |
| Waga | 0.251 kg / 1000 sztuk |

| | | |
|---|---|---|
| SCREWERK | **STP38A0250070E** | |
| _Zoll Zeichnung Größe A | Skala 3:1 | 2024-10 |