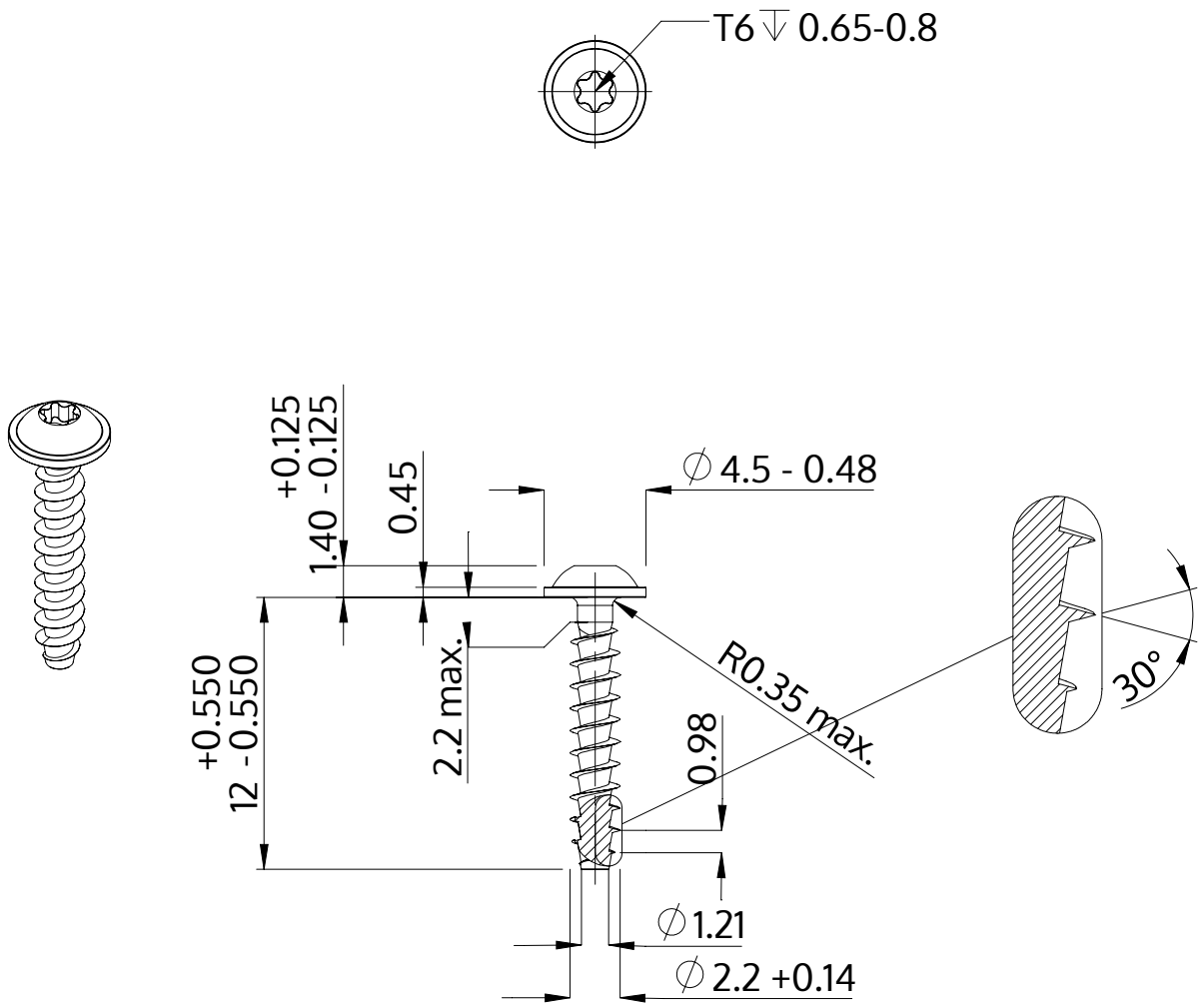

Description	STP38A 2.2x12.0 - T6
Material	steel, hardened
Surface	zinc-plated 5-7 µm, baked, blue / transparent passivated
Weight	0.278 kg / 1000 pieces

SCREWERK	**STP38A0220120S**	
Metric Drawing A4	Scale 3:1	2024-10