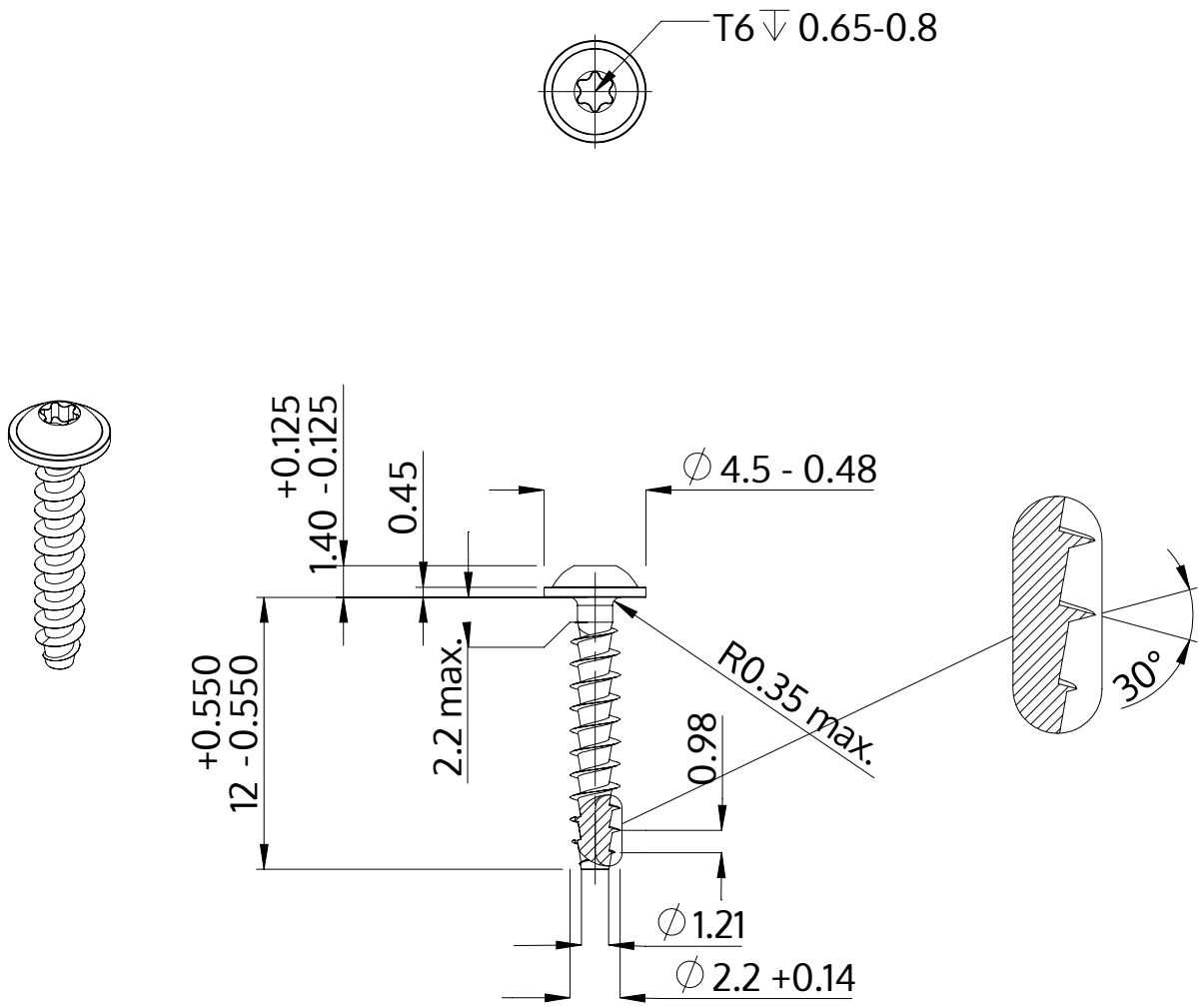

Description	STP38A 2.2x12.0 - T6
Material	stainless-steel A2
Surface	bright, pickled and passivated
Weight	0.278 kg / 1000 pieces

SCREWERK	**STP38A0220120E**	
Metric Drawing A4	Scale 3:1	2024-10