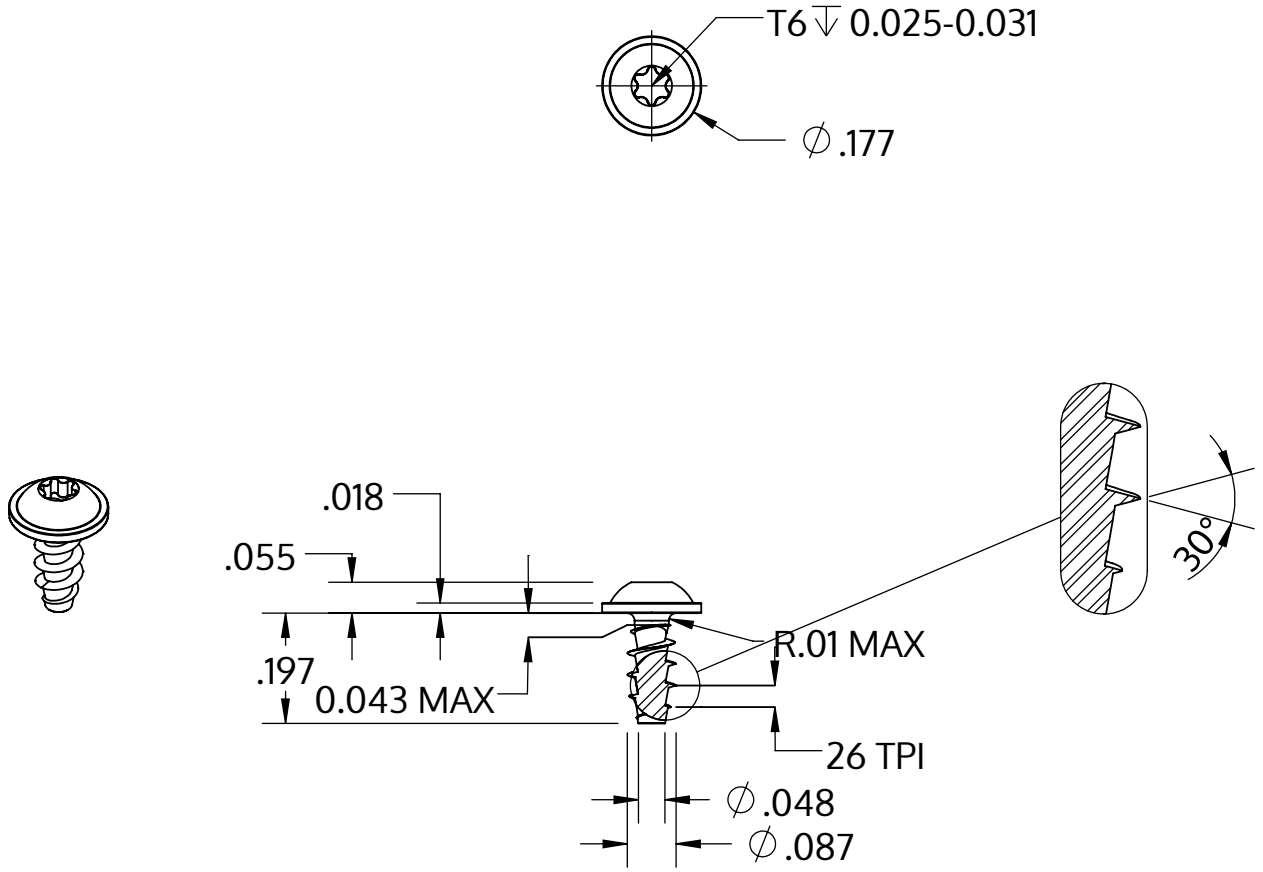

Metric size	M2.2 x 0.98 mm
US size (converted)	#0.086-26
	Tolerances [inch]
Length	+/- 0.014
Head diameter	+0 / -0.018
Head height	+/- 0.004
Thread diameter	+0.005 / -0

Description	STP38A 2.2x5.0 - T6
Matière	acier inoxydable A2
Surface	brillant décapé et passivé
Poids	0.166 kg / 1000 Unité

SCREWERK	**STP38A0220050E**	
_Zoll Zeichnung Größe A	Redimensionner 3:1	2024-10