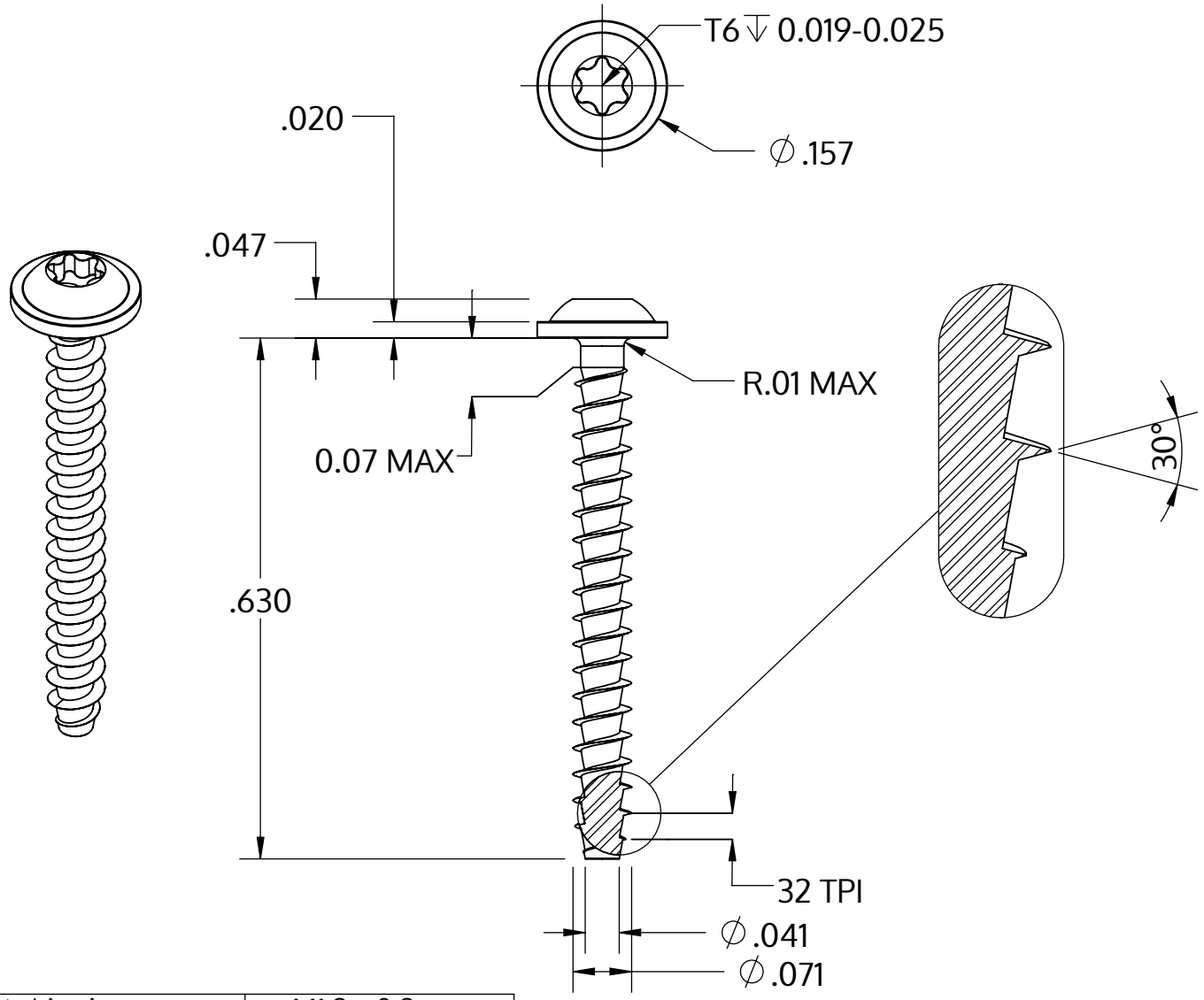


| | |
|---|---|
| Metric size | M1.8 x 0.8 mm |
| US size (converted) | #1-32 |
| | Tolerances [inch] |
| Length | +/- 0.021 |
| Head diameter | +0 / -0.018 |
| Head height | +/- 0.004 |
| Thread diameter | +0.005 / -0 |

| | |
|---|---|
| Descripción | STP38A 1.8x16.0 - T6 |
| Material | Acero, endurecido |
| Superficie | galvanizado 5-7 micras, recocido, azul / pasivado transparente |
| Peso | 0.278 kg / 1000 Piezas |

| | | |
|---|---|---|
| SCREWERK | **STP38A0180160S** | |
| _Zoll Zeichnung Größe A | Escalada 5:1 | 2024-10 |