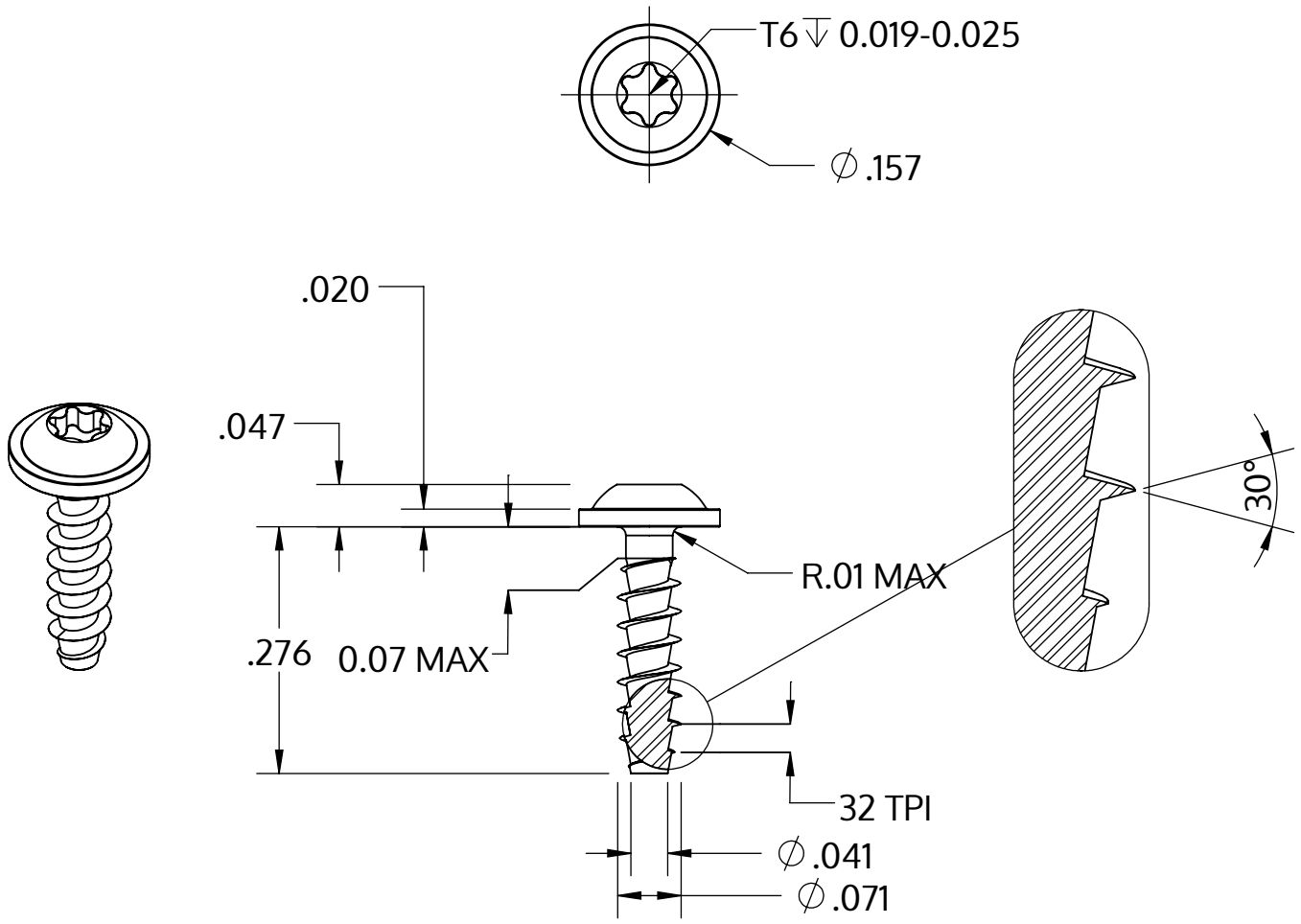

Metric size	M1.8 x 0.8 mm
US size (converted)	#1-32
	Tolerances [inch]
Length	+/- 0.017
Head diameter	+0 / -0.018
Head height	+/- 0.004
Thread diameter	+0.005 / -0

Description	STP38A 1.8x7.0 - T6
Material	stainless-steel A2
Surface	bright, pickled and passivated
Weight	0.166 kg / 1000 pieces

SCREWERK	**STP38A0180070E**	
Inch Drawing Size A	Scale 5:1	2024-10