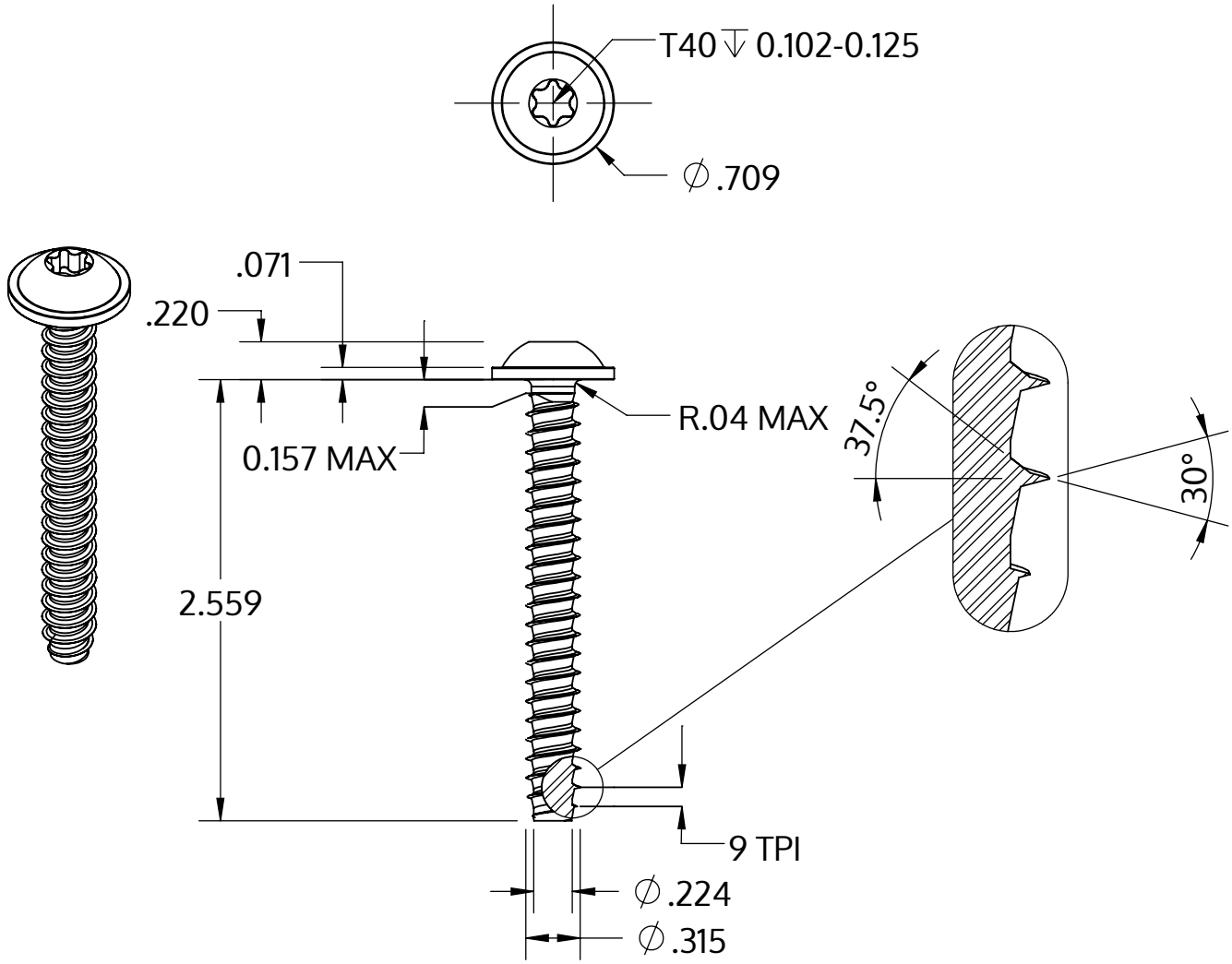

Metric size	M8 x 2.82 mm
US size (converted)	#0.314-9
	Tolerances [inch]
Length	+/- 0.037
Head diameter	+0 / -0.027
Head height	+/- 0.005
Thread diameter	+0.007 / -0

Description	STP38 8.0x65.0 - T40
Material	stainless-steel A2
Surface	bright, pickled and passivated
Weight	21.024 kg / 1000 pieces

SCREWERK	**STP380800650E**	
Inch Drawing Size A	Scale 1:1	2024-10