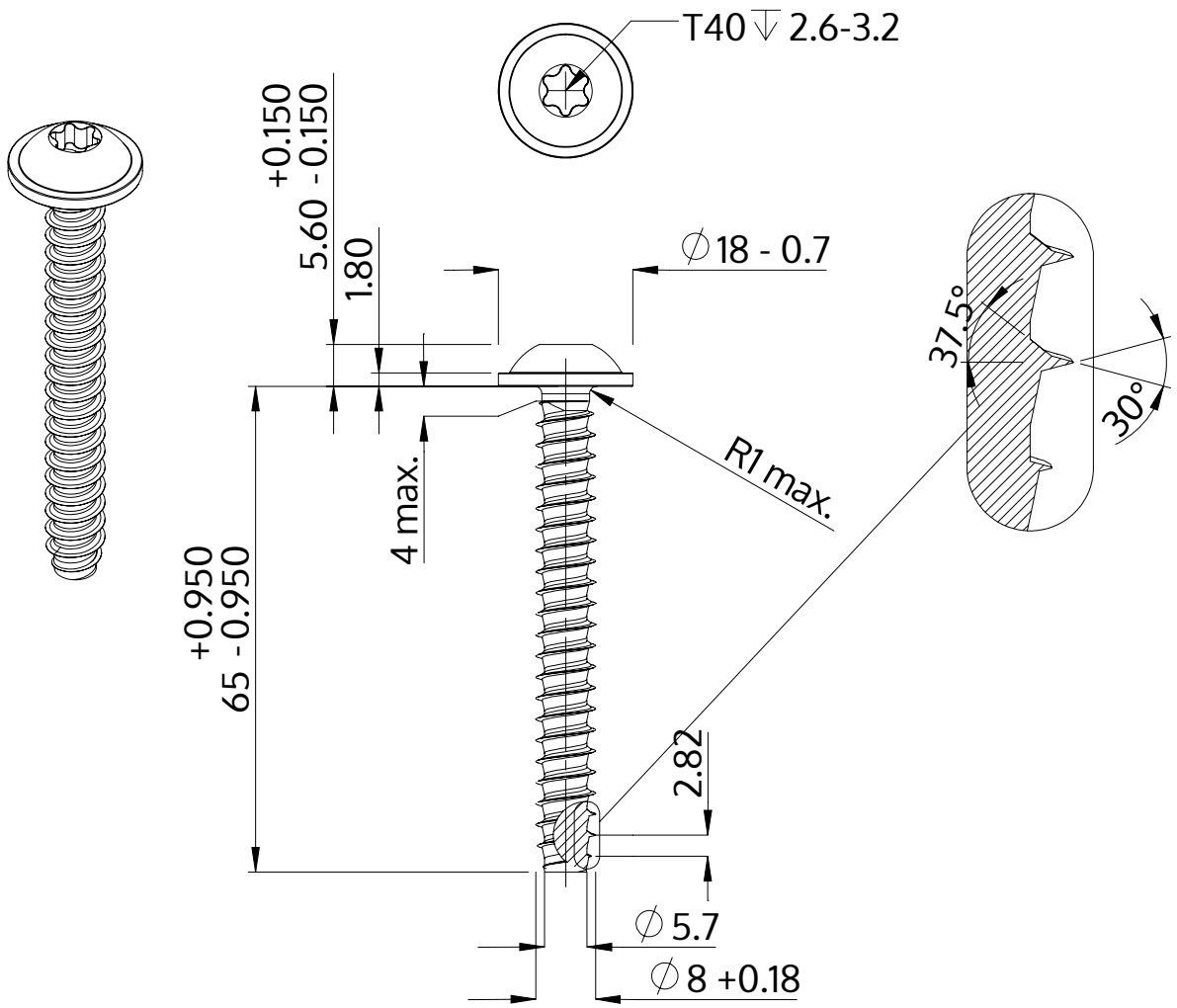

Description	STP38 8.0x65.0 - T40
Material	stainless-steel A2
Surface	bright, pickled and passivated
Weight	21.024 kg / 1000 pieces

SCREWERK	**STP380800650E**	
Metric Drawing A4	Scale 1:1	2024-10