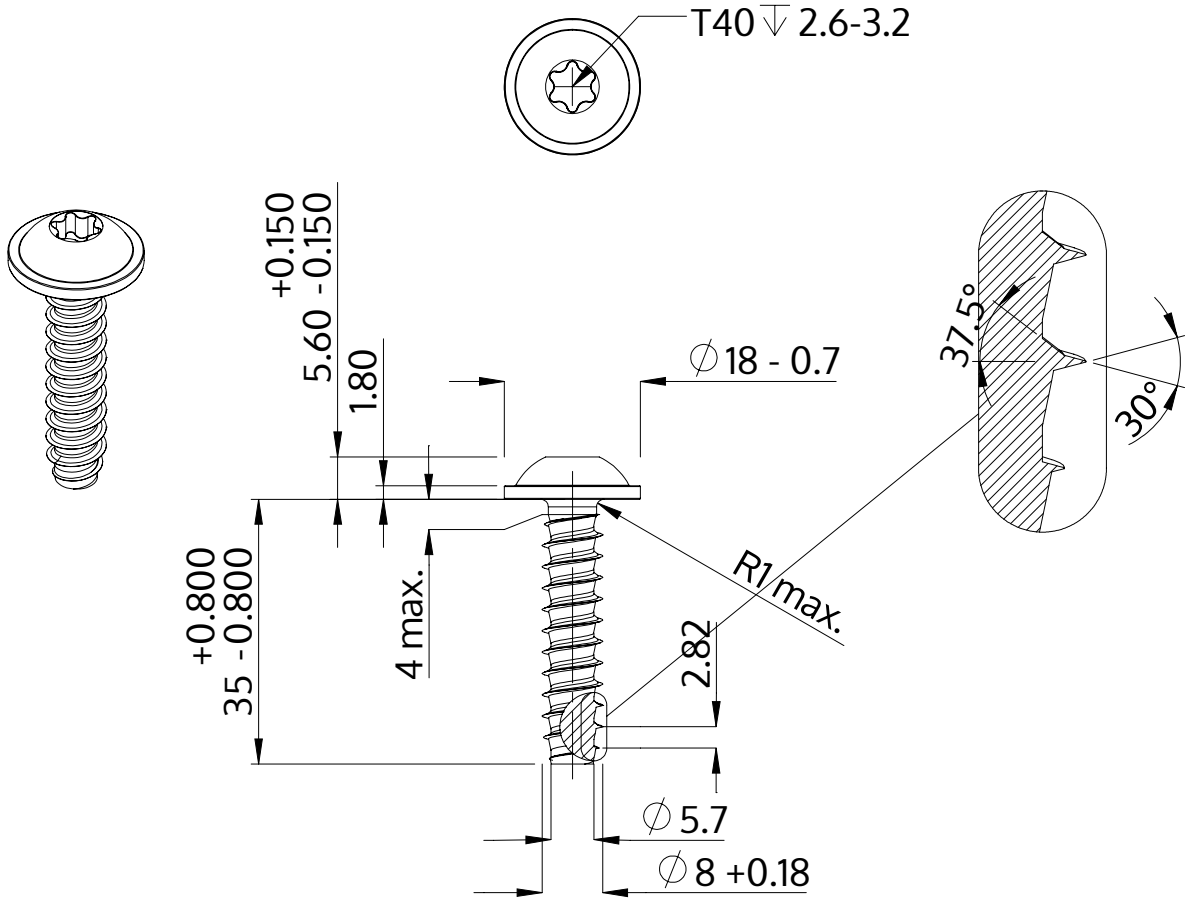

Description	STP38 8.0x35.0 - T40
Material	stainless-steel A2
Surface	bright, pickled and passivated
Weight	13.799 kg / 1000 pieces

SCREWERK	**STP380800350E**	
Metric Drawing A4	Scale None:1	2024-04