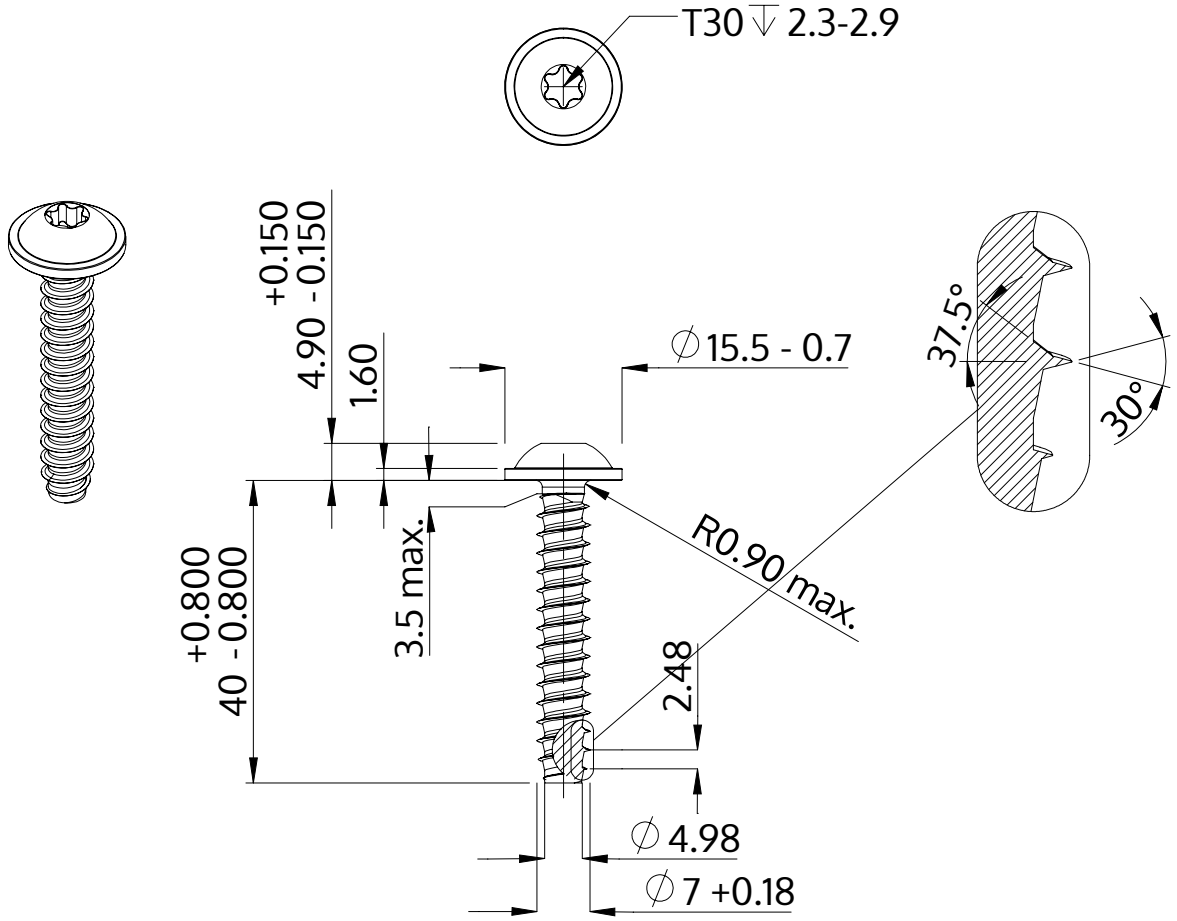

Description	STP38 7.0x40.0 - T30
Material	stainless-steel A2
Surface	bright, pickled and passivated
Weight	11.364 kg / 1000 pieces

SCREWERK	**STP380700400E**	
Metric Drawing A4	Scale 1:1	2024-10