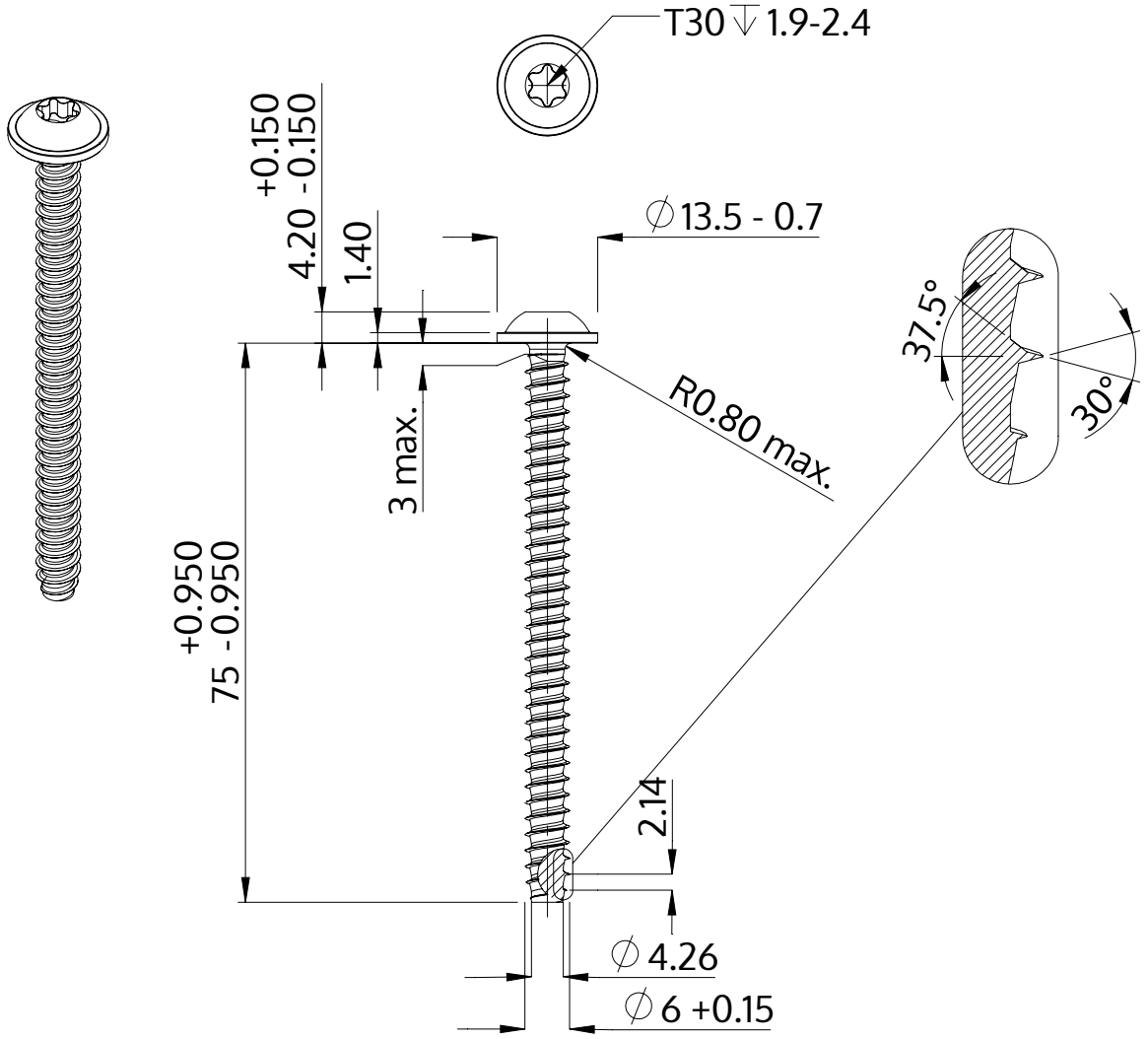

Description	STP38 6.0x75.0 - T30
Material	steel, hardened
Surface	Zinc-Nickel-plated min. 5µm, passivated black/ Cr-VI-free, baked, sealed
Weight	12.570 kg / 1000 pieces

SCREWERK	**STP380600750B**	
Metric Drawing A4	Scale 1:1	2024-10