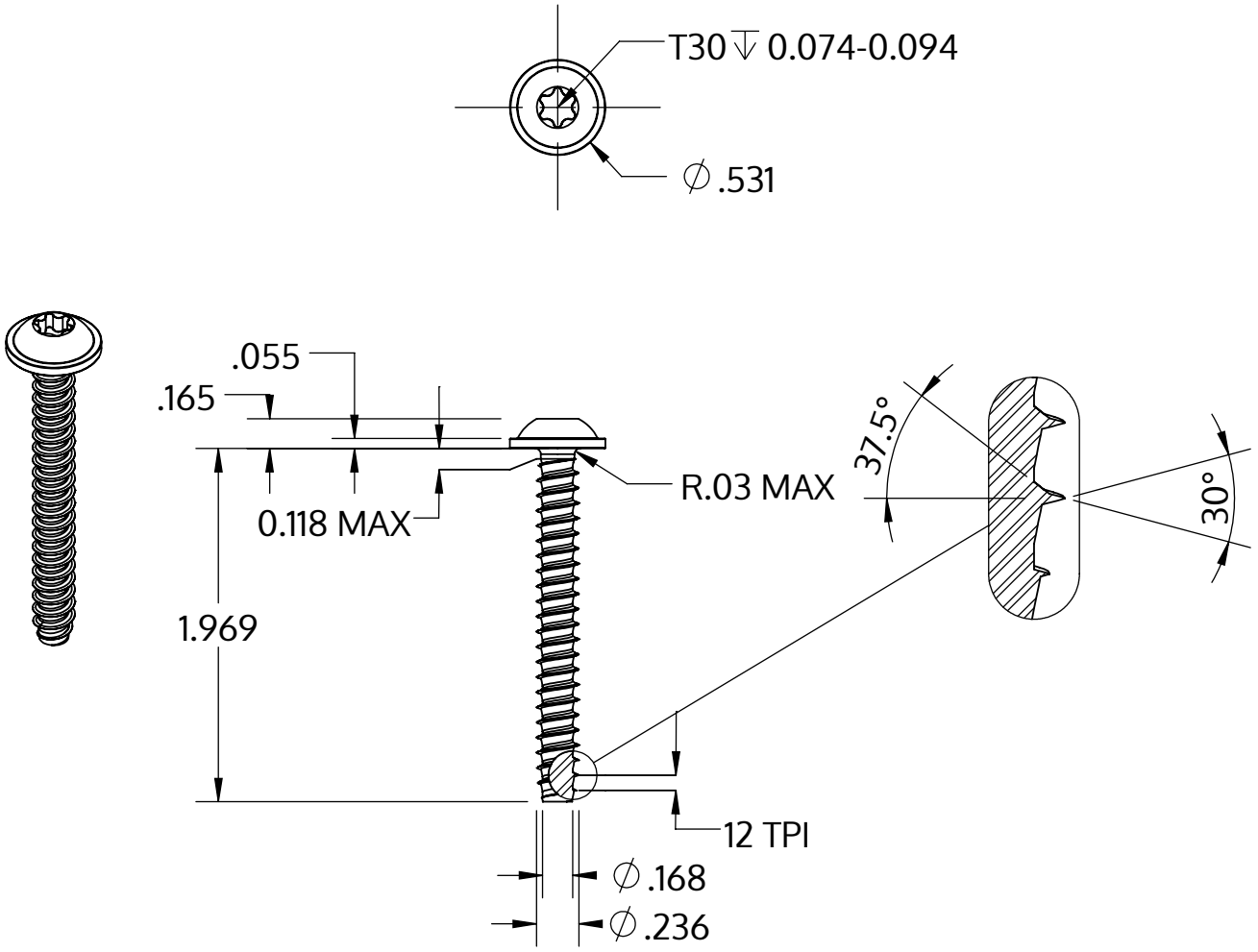

Metric size	M6 x 2.14 mm
US size (converted)	#0.236-12
	Tolerances [inch]
Length	+/- 0.031
Head diameter	+0 / -0.027
Head height	+/- 0.005
Thread diameter	+0.005 / -0

Description	STP38 6.0x50.0 - T30
Matière	acier inoxydable A2
Surface	brillant décapé et passivé
Poids	9.179 kg / 1000 Unité

SCREWERK	**STP380600500E**	
_Zoll Zeichnung Größe A	Redimensionner 1:1	2024-10