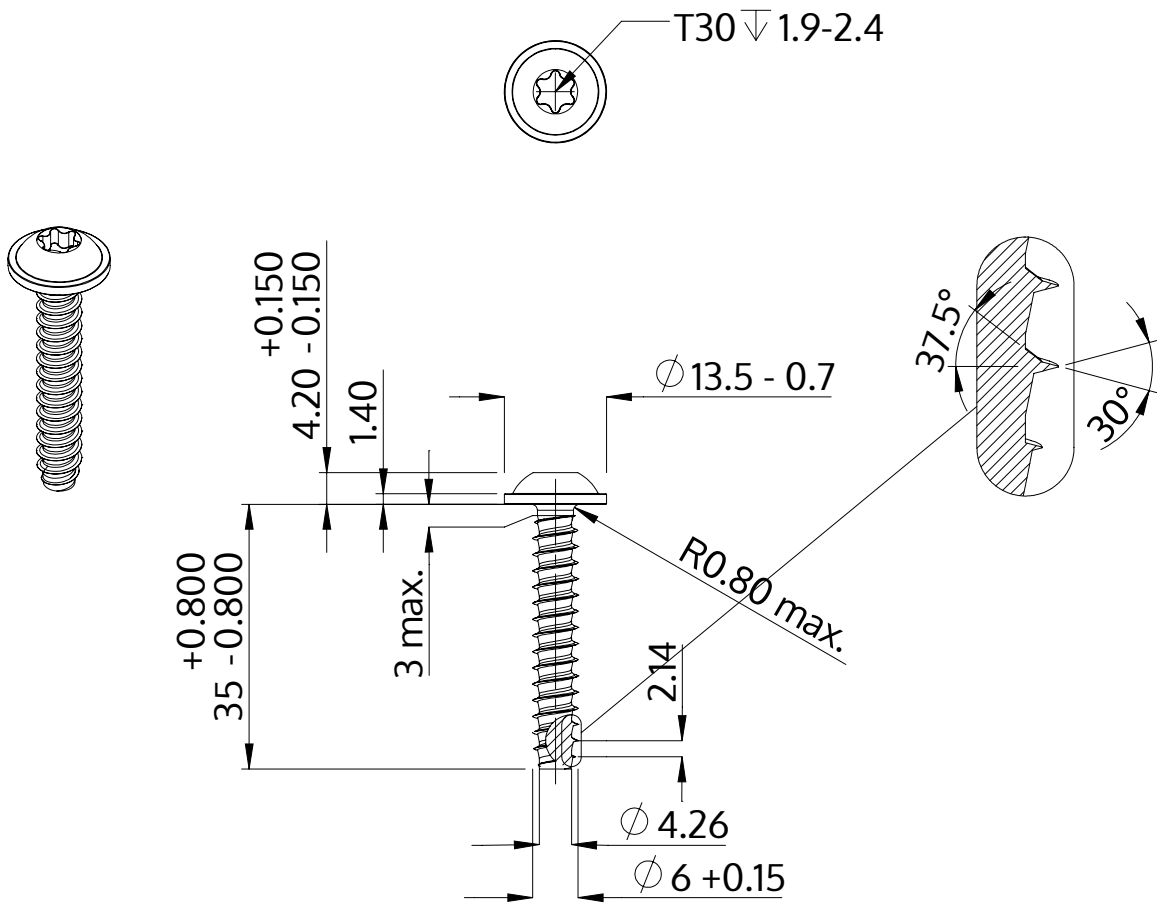


| | |
|---|---|
| Description | STP38 6.0x35.0 - T30 |
| Material | stainless-steel A2 |
| Surface | bright, pickled and passivated |
| Weight | 7.144 kg / 1000 pieces |

| | | |
|---|---|---|
| SCREWERK | **STP380600350E** | |
| Metric Drawing A4 | Scale 1:1 | 2024-10 |