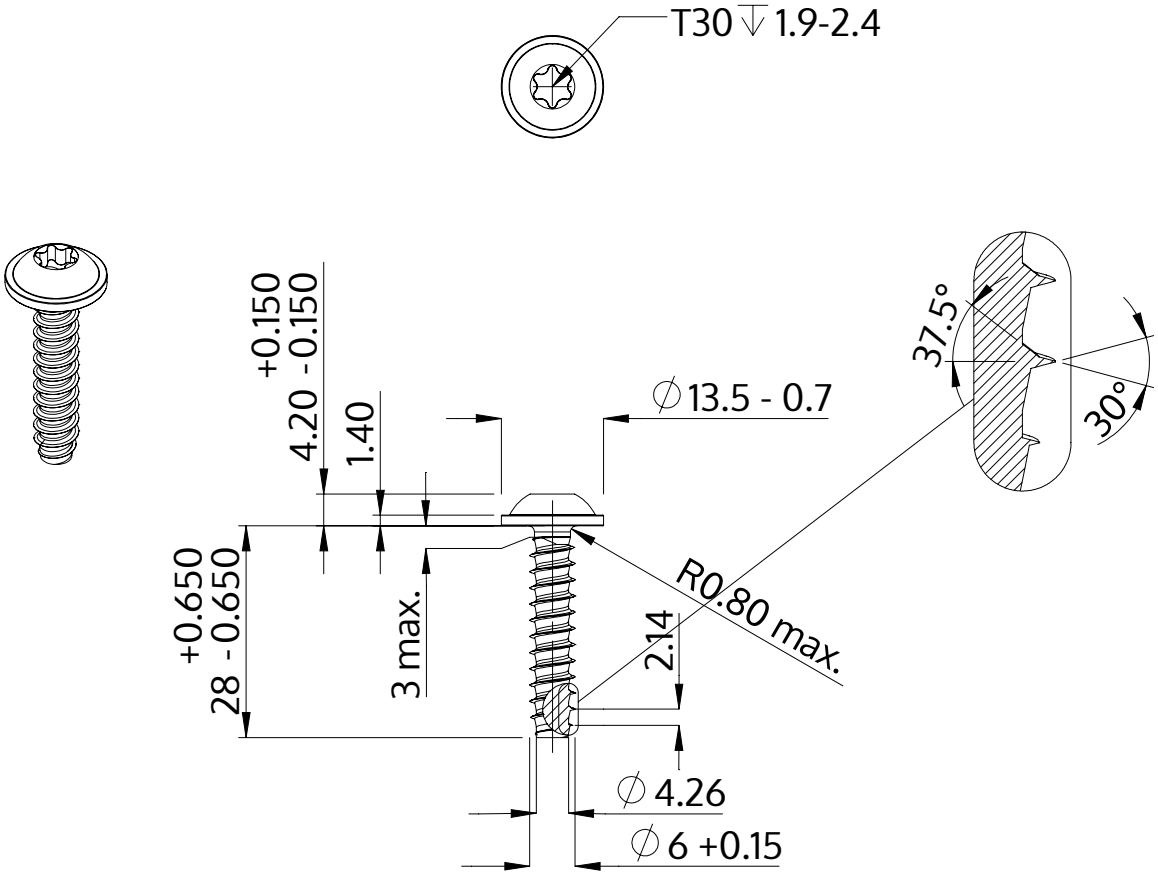

Description	STP38 6.0x28.0 - T30
Material	steel, hardened
Surface	zinc-plated 5-7 µm, baked, blue / transparent passivated
Weight	6.194 kg / 1000 pieces

SCREWERK	**STP380600280S**	
Metric Drawing A4	Scale 1:1	2024-10