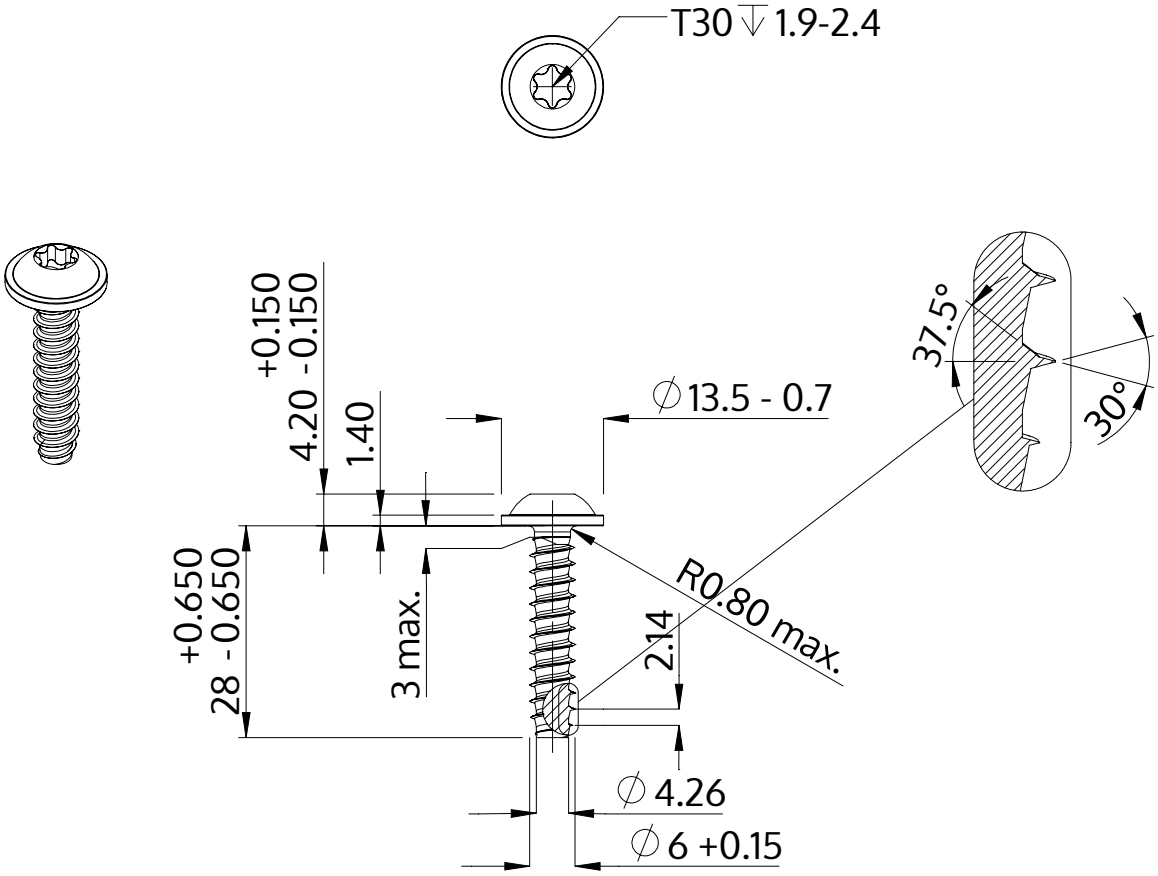

Description	STP38 6.0x28.0 - T30
Material	stainless steel A4
Surface	bright, pickled and passivated
Weight	6.194 kg / 1000 pieces

SCREWERK	**STP380600280C**	
Metric Drawing A4	Scale 1:1	2024-10