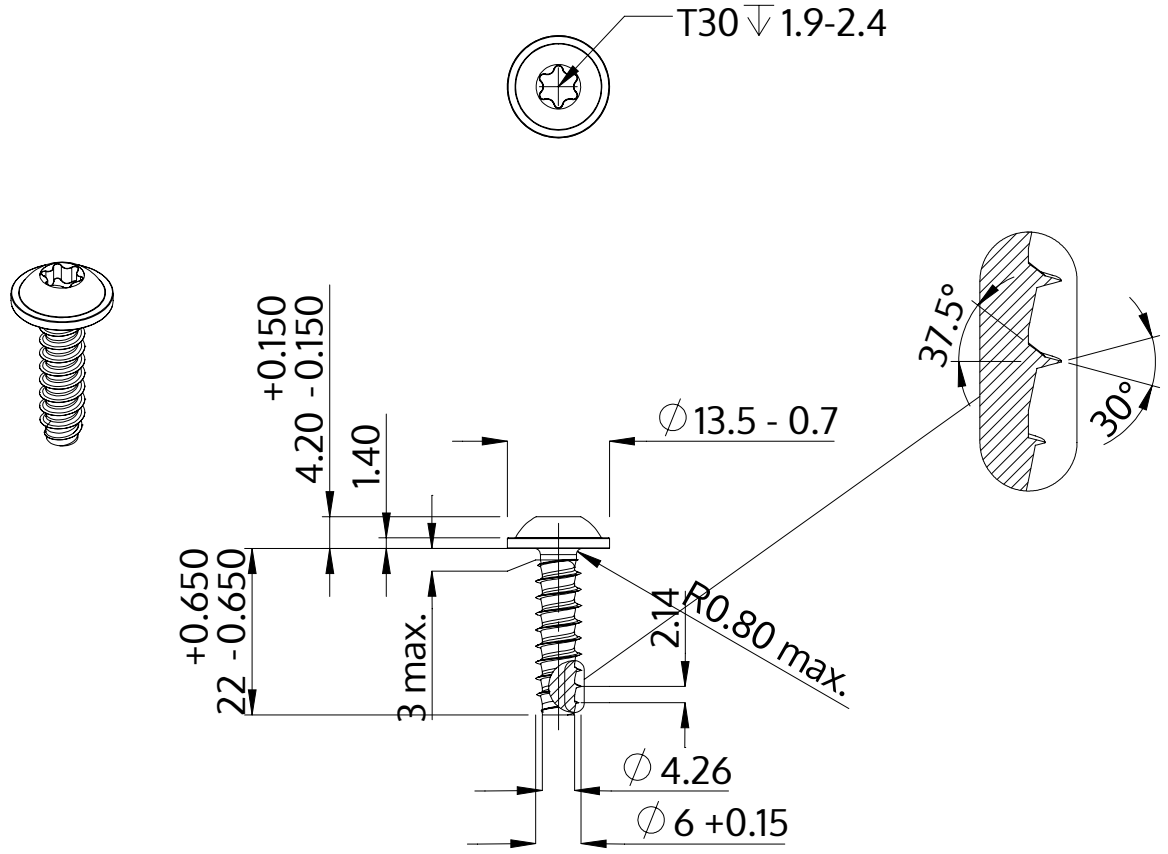

Description	STP38 6.0x22.0 - T30
Material	steel, hardened
Surface	Zinc-Nickel-plated min. 5µm, passivated black/ Cr-VI-free, baked, sealed
Weight	5.381 kg / 1000 pieces

SCREWERK	**STP380600220B**	
Metric Drawing A4	Scale None:1	2024-04