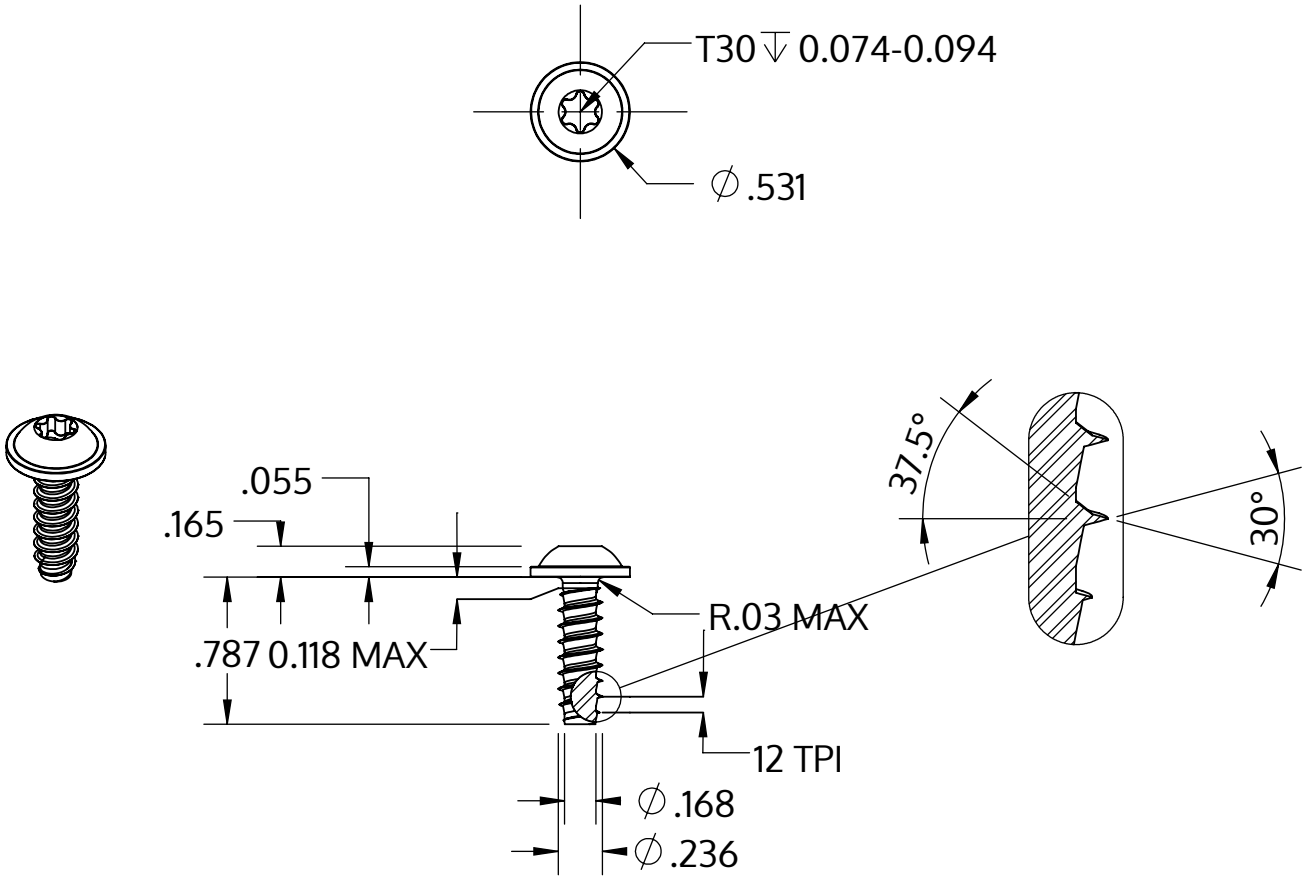


| | |
|---|---|
| Metric size | M6 x 2.14 mm |
| US size (converted) | #0.236-12 |
| | Tolerances [inch] |
| Length | +/- 0.025 |
| Head diameter | +0 / -0.027 |
| Head height | +/- 0.005 |
| Thread diameter | +0.005 / -0 |

| | |
|---|---|
| Descrizione | STP38 6.0x20.0 - T30 |
| Materiale | acciaio inossidabile A4 |
| Superficie | bianco-decapato e passivato |
| Peso | 5.109 kg / 1000 pezzi |

| | | |
|---|---|---|
| SCREWERK | **STP380600200C** | |
| _Zoll Zeichnung Größe A | Scala 1:1 | 2024-10 |