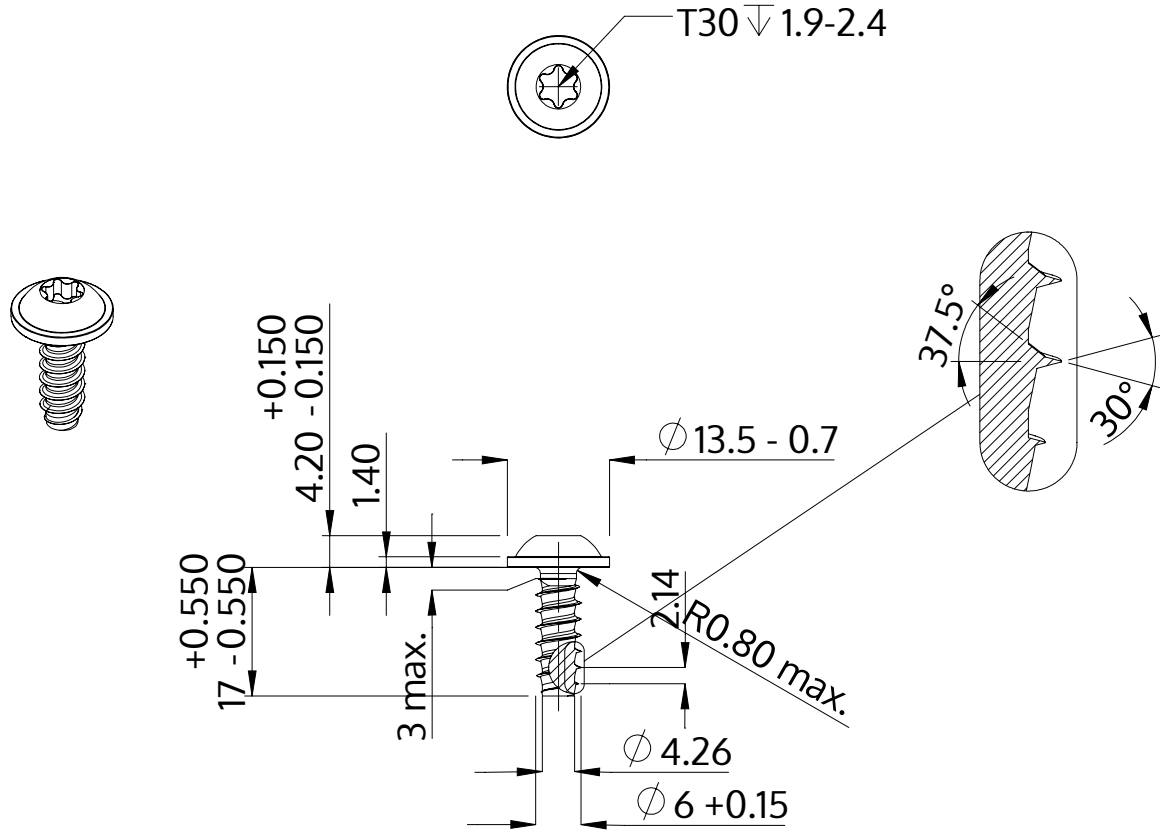

Description	STP38 6.0x17.0 - T30
Material	stainless steel A4
Surface	bright, pickled and passivated
Weight	4.702 kg / 1000 pieces

SCREWERK	**STP380600170C**	
Metric Drawing A4	Scale None:1	2024-04