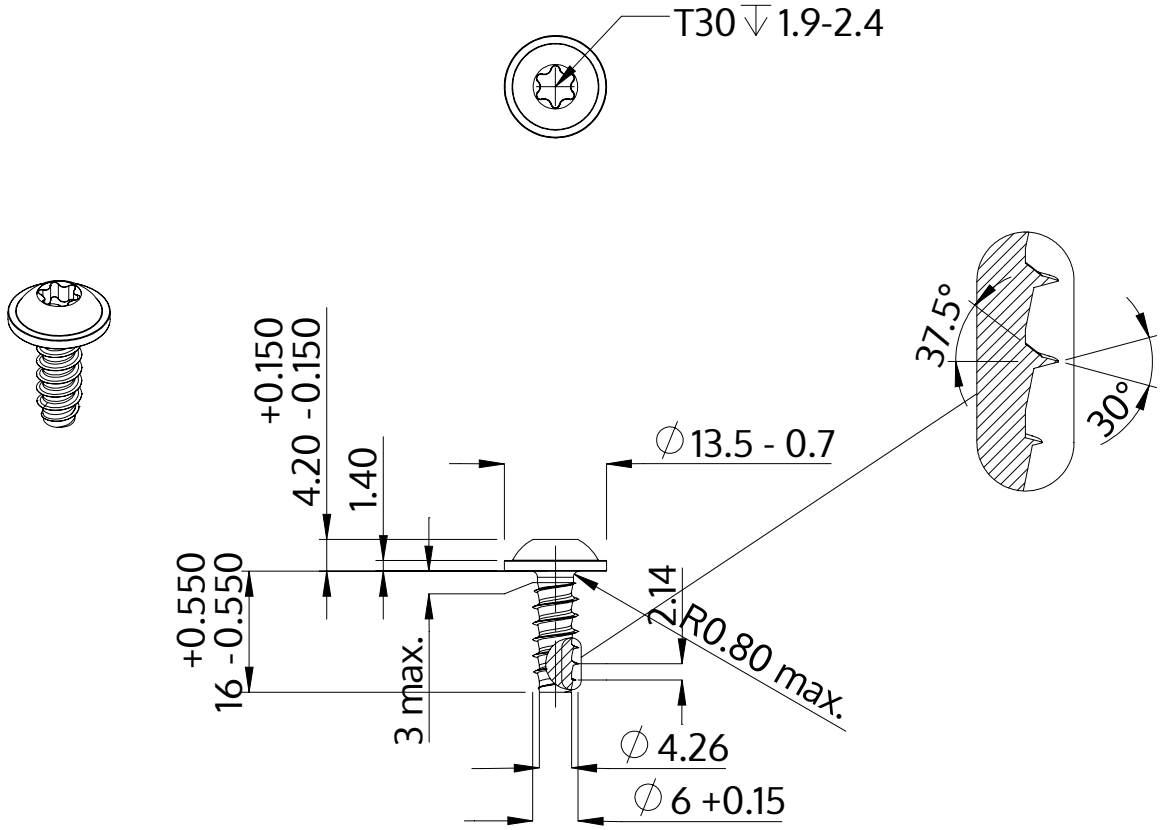

Description	STP38 6.0x16.0 - T30
Material	stainless-steel A2
Surface	bright, pickled and passivated
Weight	4.567 kg / 1000 pieces

SCREWERK	**STP380600160E**	
Metric Drawing A4	Scale None:1	2024-04