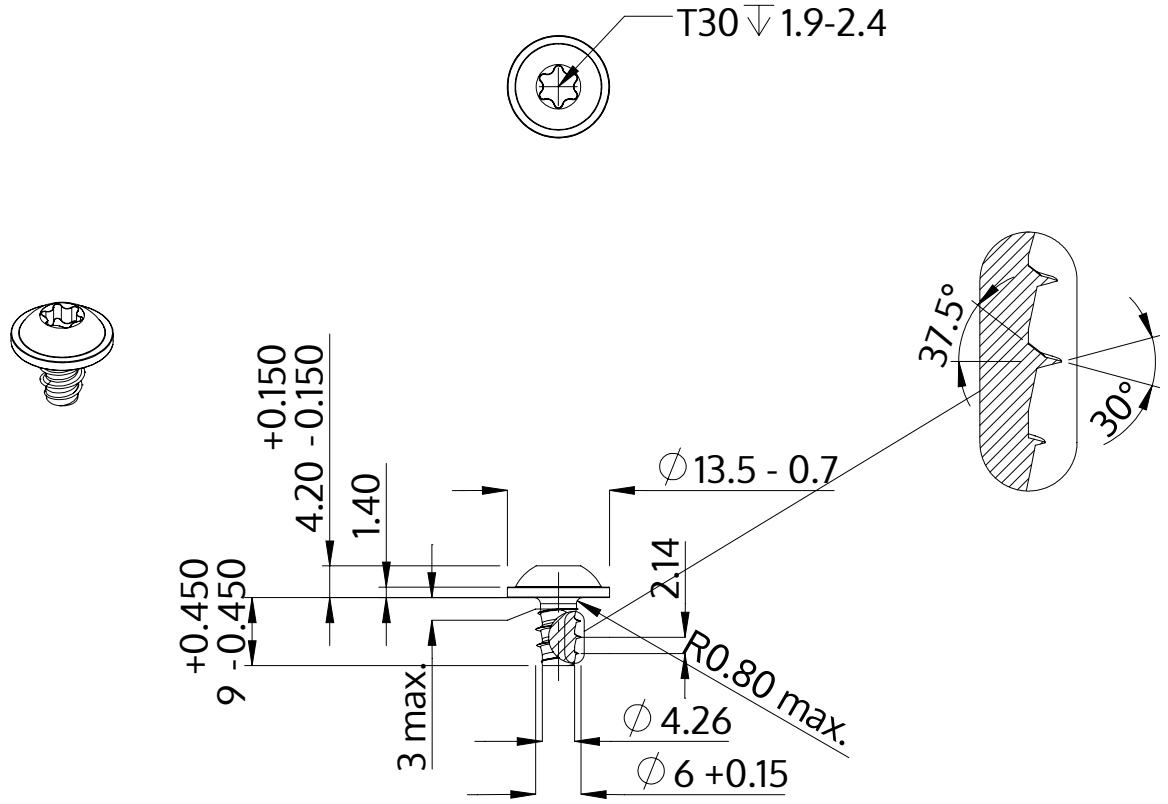

Description	STP38 6.0x9.0 - T30
Material	stainless-steel A2
Surface	bright, pickled and passivated
Weight	3.617 kg / 1000 pieces

SCREWERK	**STP380600090E**	
Metric Drawing A4	Scale None:1	2024-04