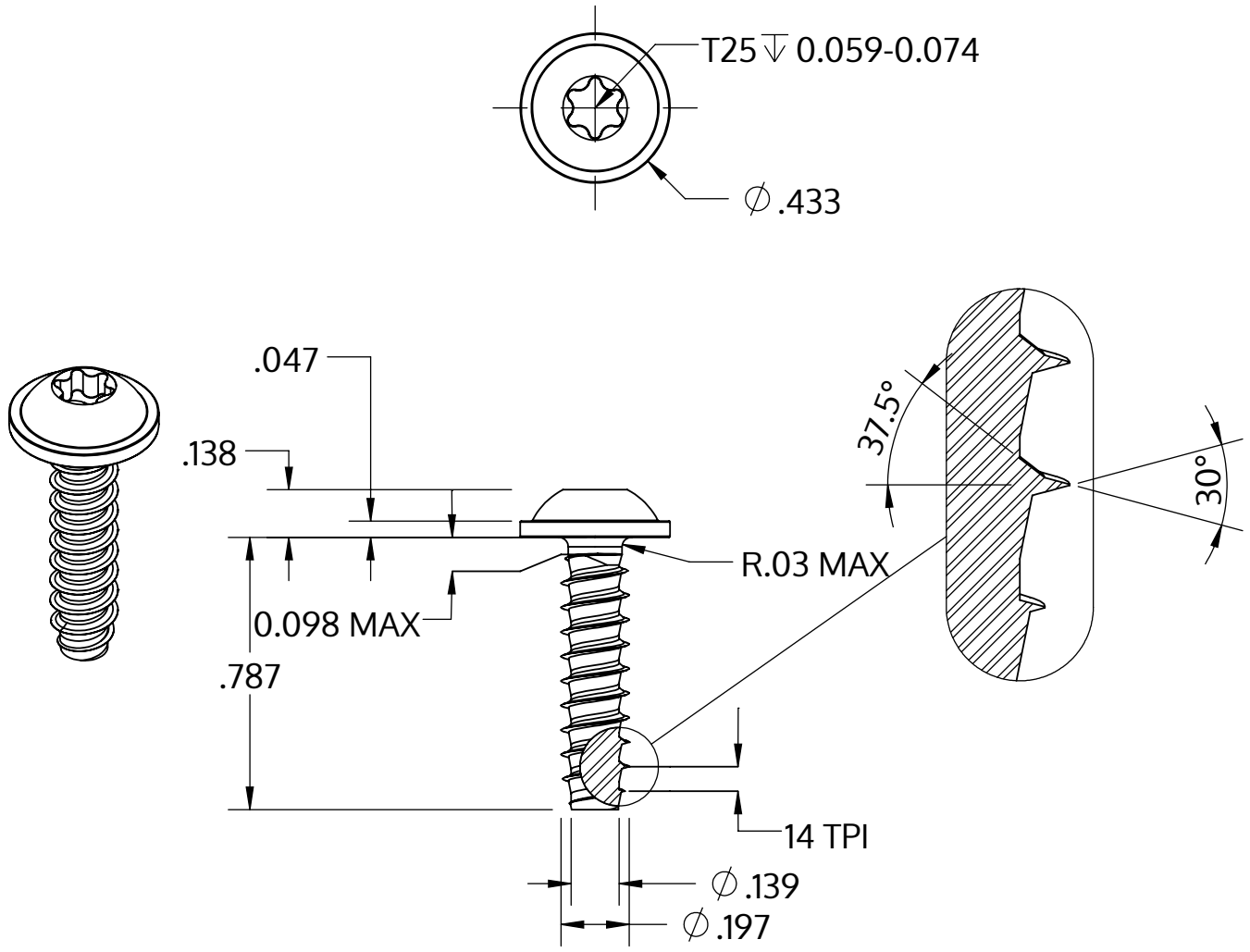

Metric size	M5 x 1.8 mm
US size (converted)	#11-14
	Tolerances [inch]
Length	+/- 0.025
Head diameter	+0 / -0.027
Head height	+/- 0.005
Thread diameter	+0.005 / -0

Beskrivning	STP38 5.0x20.0 - T25
Material	rostfritt stål A2
Yta	svart
Vikt	3.282 kg / 1000 styck

SCREWERK	**STP380500200J**	
_Zoll Zeichnung Größe A	Skala 2:1	2024-10