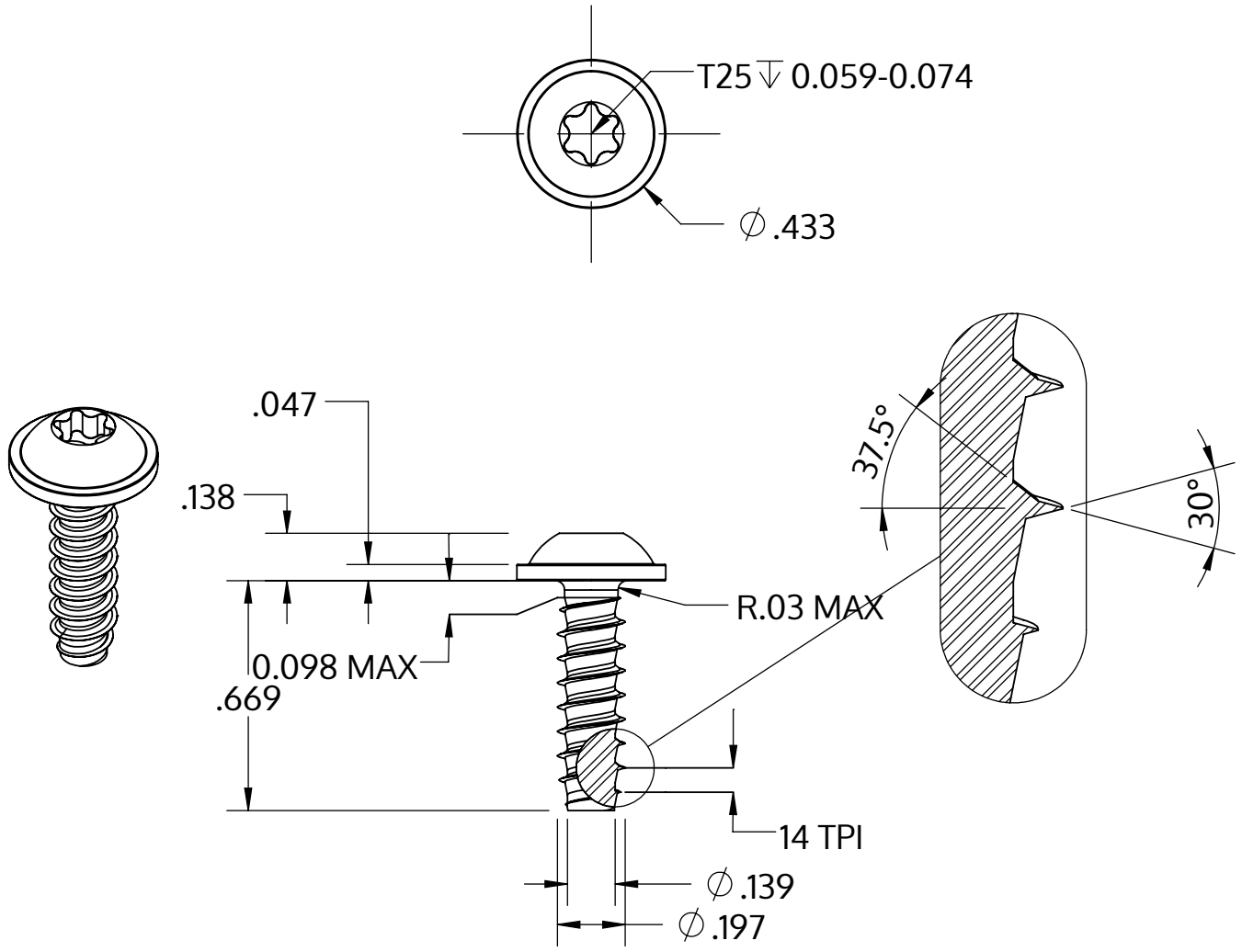

Metric size	M5 x 1.8 mm
US size (converted)	#11-14
	Tolerances [inch]
Length	+/- 0.021
Head diameter	+0 / -0.027
Head height	+/- 0.005
Thread diameter	+0.005 / -0

Descrizione	STP38 5.0x17.0 - T25
Materiale	acciaio inossidabile A2
Superficie	bianco-decapato e passivato
Peso	2.998 kg / 1000 pezzi

SCREWERK	**STP380500170E**	
_Zoll Zeichnung Größe A	Scala 2:1	2024-10