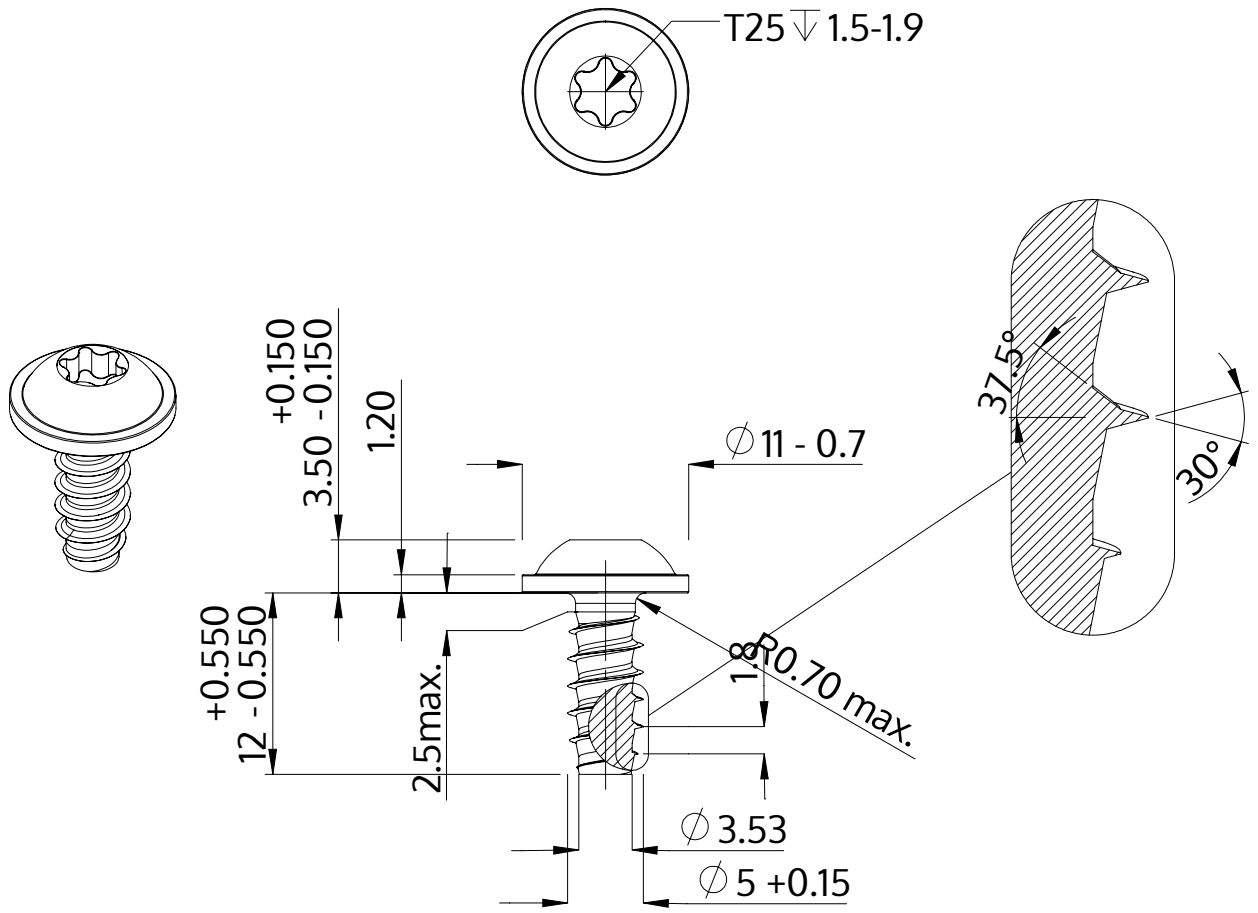

Description	STP38 5.0x12.0 - T25
Material	stainless steel A4
Surface	bright, pickled and passivated
Weight	2.525 kg / 1000 pieces

SCREWERK	**STP380500120C**	
Metric Drawing A4	Scale None:1	2024-04