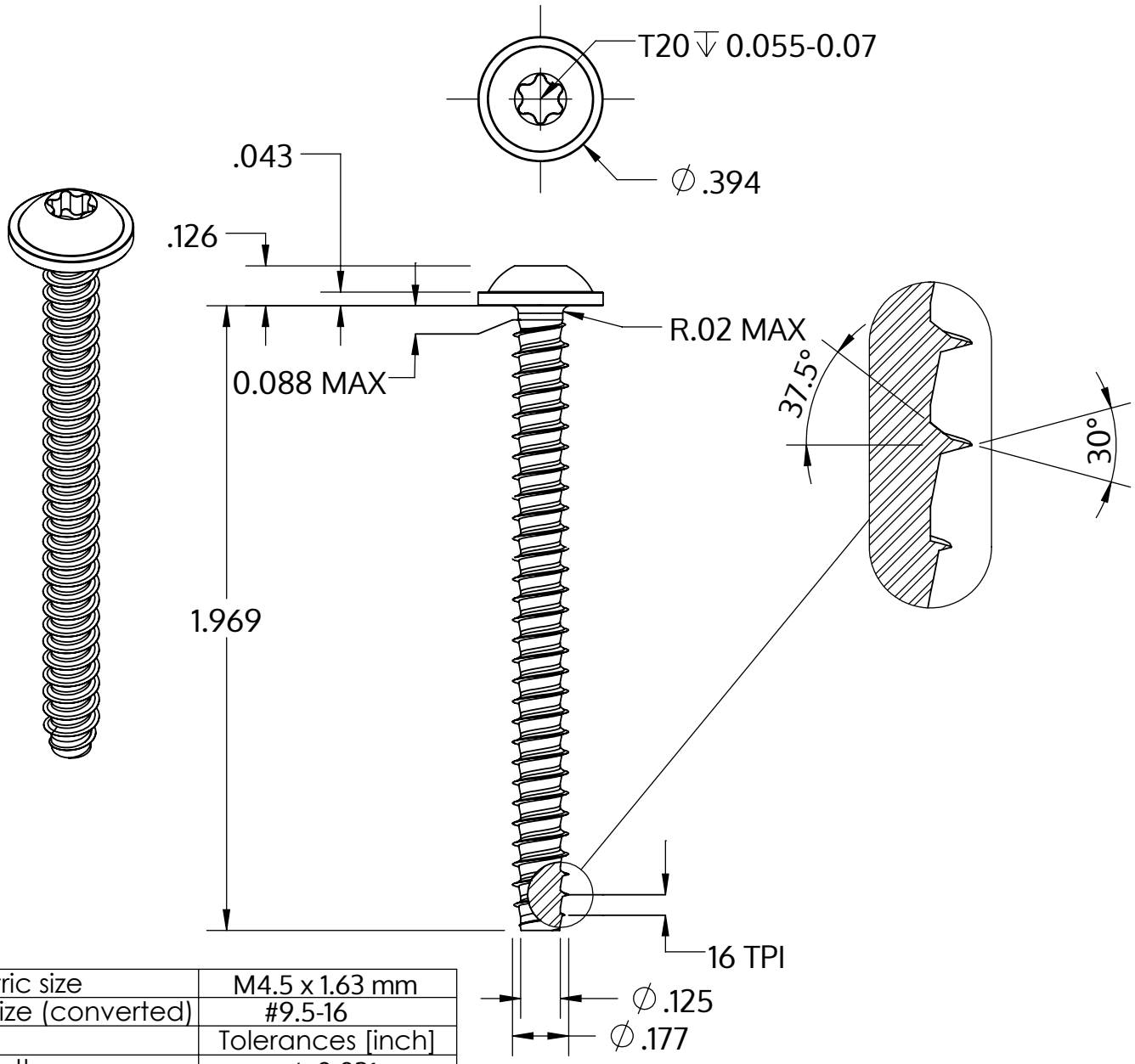

Metric size	M4.5 x 1.63 mm
US size (converted)	#9.5-16
	Tolerances [inch]
Length	+/- 0.031
Head diameter	+0 / -0.022
Head height	+/- 0.005
Thread diameter	+0.003 / -0

Descrizione	STP38 4.5x50.0 - T20
Materiale	acciaio inossidabile A2
Superficie	bianco-decapato e passivato
Peso	4.857 kg / 1000 pezzi

SCREWERK	**STP380450500E**	
_Zoll Zeichnung Größe A	Scala 2:1	2024-10