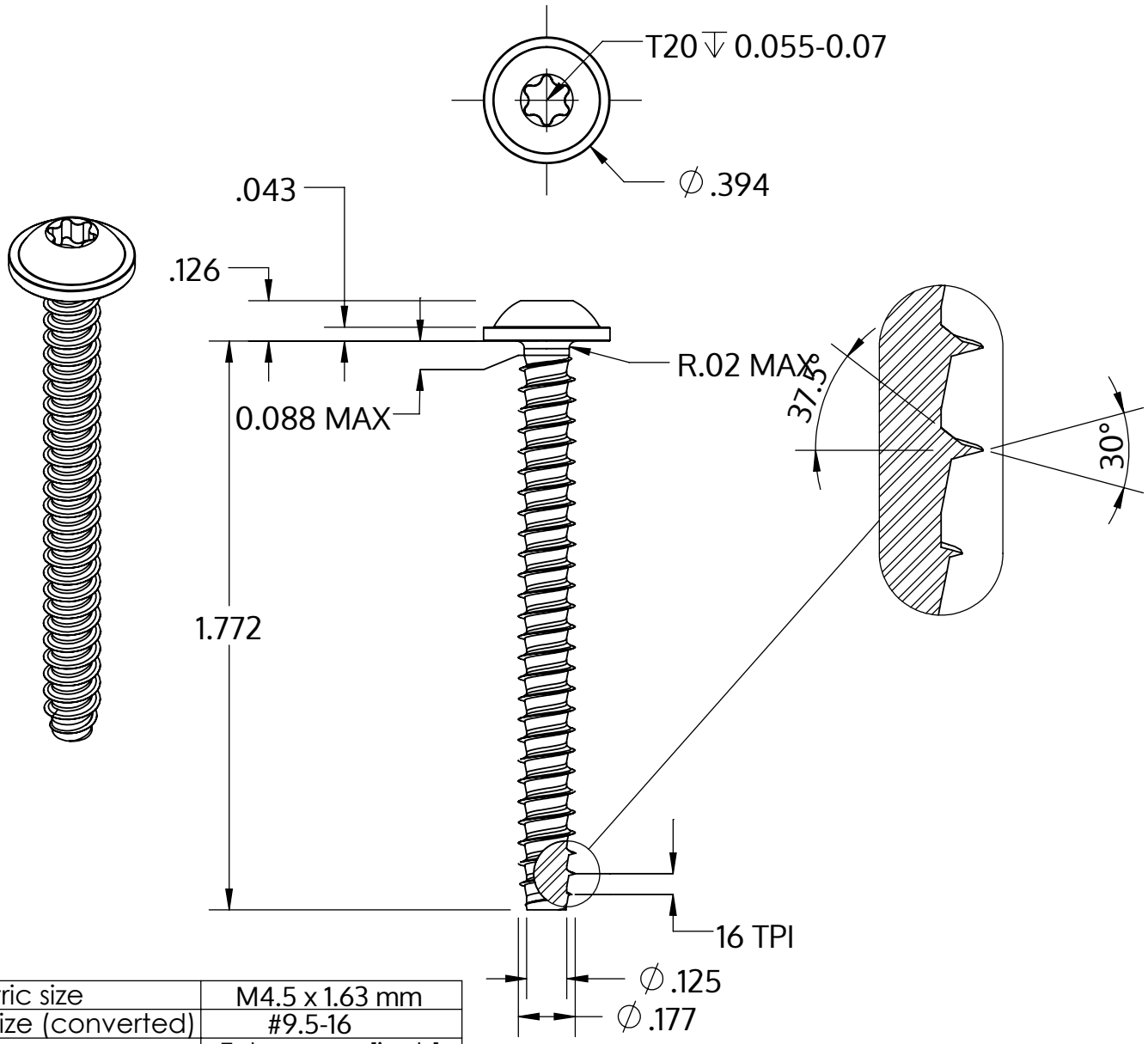

Metric size	M4.5 x 1.63 mm
US size (converted)	#9.5-16
	Tolerances [inch]
Length	+/- 0.031
Head diameter	+0 / -0.022
Head height	+/- 0.005
Thread diameter	+0.003 / -0

Description	STP38 4.5x45.0 - T20
Material	steel, hardened
Surface	Zinc-Nickel-plated min. 5µm, passivated black/ Cr-VI-free, baked, sealed
Weight	4.472 kg / 1000 pieces

SCREWERK	**STP380450450B**	
Inch Drawing Size A	Scale 2:1	2024-10